G258A
G335A
G380A
G400A

Gas - Light oil burners

LMV 5x
Microprocessor controlled

MANUAL OF INSTALLATION - USE - MAINTENANCE

CIB UNIGAS

BURNERS - BRUCIATORI - BRULERS - BRENNER - QUEMADORES - ГОРЕЛКИ

M039653CA 0.0 11/2022

DANGERS, WARNINGS AND NOTES OF CAUTION

This manual is supplied as an integral and essential part of the product and must be delivered to the user.

Information included in this section are dedicated both to the user and to personnel following product installation and maintenance.

The user will find further information about operating and use restrictions, in the second section of this manual. we highly recommend to read it.

Carefully keep this manual for future reference.

The following:

- Entails the customer's acknowledgement and acceptance of the company's general terms and conditions of sale, in force at the date of order confirmation and available in the appendix to the current price lists.
- Is intended exclusively for specialised, experienced and trained users able to operate in conditions that are safe for people, the device and the environment, and in full compliance with the requirements set out on the following pages and with current health and safety regulations.

Information regarding assembly/installation, maintenance, replacement and repair is always and exclusively intended for (and therefore only to be carried out by) specialised personnel and/or directly by the Authorised Technical Service

IMPORTANT :

The supply has been made at the best conditions on the basis of the customer's order and technical indications concerning the state of the places and the installation systems, as well as the need to prepare certain certifications and / or additional adaptations with respect to the standard observed and transmitted for each product. In this respect, the manufacturer declines any responsibility for complaints, malfunctions, criticalities, damages and/or anything else consequent to incomplete, inaccurate and/ or missing information, as well as failure to comply with the technical requirements and installation regulations, initial start-up, operational management and maintenance.

For proper operation of the device, it is necessary to ensure the readability and conservation of the manual, also for future reference. In case of deterioration or more simply for reasons of technical and operational insight, contact the manufacturer directly. Text, descriptions, images, examples and anything else contained in this document are the exclusive property of the manufacturer. Any reproduction is prohibited.

RISK ANALYSIS

Instruction manual supplied with the burner:

This is an integral and essential part of the product and must not be separated from it. It must therefore be kept carefully for any necessary consultation and must accompany the burner even if it is transferred to another owner or user, or to another system. In the event of damage or loss, another copy must be requested from the local customer service centre;

Delivery of the system and instruction manual

.

The supplier of the system is obliged to accurately inform the user about:– Use of the system;

– any further testing that may be necessary before activating the system;

– maintenance and the requirement to have the system checked at least once a year by a contractor or other specialised technician.

To ensure periodic monitoring, the manufacturer recommends drawing up a Maintenance Agreement.

WARRANTY AND LIABILITY

In particular, warranty and liability claims will no longer be valid in the event of damage to persons and/or property if such damage is due to any of the following causes:

- Incorrect installation, start-up, use and maintenance of the burner;
- Improper, incorrect or unreasonable use of the burner;
- Operation by unqualified personnel;
- Carrying out of unauthorised changes to the device;
- Use of the burner with safety devices that are faulty, incorrectly applied and/or not working;
- Installation of untested supplementary components on the burner;
- Powering of the burner with unsuitable fuels;
- Faults in the fuel supply system;
- Use of the burner even after an error and/or fault has occurred;
- Repairs and/or overhauls incorrectly carried out;
- Modification of the combustion chamber with inserts that prevent the regular development of the structurally established flame;
- Insufficient and inappropriate supervision and care of the burner components most subject to wear and tear;
- Use of non-original components, whether spare parts, kits, accessories and optionals;
- Force majeure.

Furthermore, the manufacturer declines all responsibility for non-compliance with this manual.

WARNING! Failure to comply with this manual, operational negligence, incorrect installation and unauthorised modifications will result in the manufacturer's warranty for the burner being voided.

Personnel training

The user is the person, organisation or company that has acquired the appliance and intends to use it for the specific purpose. The user is responsible for the appliance and for training the personnel that operate it.

The user:

- Undertakes to entrust the machine to suitably trained and qualified personnel;
- Must take all measures necessary to prevent unauthorised people gaining access to the appliance;
- Undertakes to adequately inform personnel about application and observance of the safety requirements, and therefore ensure that they are familiar with the operating instructions and safety requirements;
- Must inform the manufacturer if any faults or malfunctions of the accident prevention systems occur, and if there is any suspected danger;
- Personnel must always use the personal protective equipment required by law and follow the instructions provided in this manual;
- Personnel must observe all danger and caution notices on the appliance;
- Personnel must not carry out, on their own initiative, operations or interventions outside their area of expertise;
- Personnel must inform their superiors of any problem and danger that may arise;
- The assembly of parts of other makes, or any modifications made, may alter the characteristics of the appliance and may therefore compromise operational safety. The manufacturer therefore declines all responsibility for damages arising from the use of non-original parts.

GENERAL INTRODUCTION

- The equipment must be installed in compliance with the regulations in force, following the manufacturer's instructions, by qualified personnel.
- Qualified personnel means those having technical knowledge in the field of components for civil or industrial heating systems, sanitary hot water generation and particularly service centres authorised by the manufacturer.
- Improper installation may cause injury to people and animals, or damage to property, for which the manufacturer cannot be held liable.
- Remove all packaging material and inspect the equipment for integrity.

In case of any doubt, do not use the unit - contact the supplier.

The packaging materials (wooden crate, nails, fastening devices, plastic bags, foamed polystyrene, etc), should not be left within the reach of children, as they may prove harmful.

- Before any cleaning or servicing operation, disconnect the unit from the mains by turning the master switch OFF, and/or through the cutout devices that are provided.
- Make sure that inlet or exhaust grilles are unobstructed.
- In case of breakdown and/or defective unit operation, disconnect the unit. Make no attempt to repair the unit or take any direct action.

Contact qualified personnel only.

Units shall be repaired exclusively by a servicing centre, duly authorised by the manufacturer, with original spare parts and accessories.

Failure to comply with the above instructions is likely to impair the unit's safety.

To ensure equipment efficiency and proper operation, it is essential that maintenance operations are performed by qualified personnel at regular intervals, following the manufacturer's instructions.

- When a decision is made to discontinue the use of the equipment,

those parts likely to constitute sources of danger shall be made harmless.

- In case the equipment is to be sold or transferred to another user, or in case the original user should move and leave the unit behind, make sure that these instructions accompany the equipment at all times so that they can be consulted by the new owner and/or the installer.
- This unit shall be employed exclusively for the use for which it is meant. Any other use shall be considered as improper and, therefore, dangerous.

The manufacturer shall not be held liable, by agreement or otherwise, for WARNING! Failure to observe the information given in this manual, operating negligence, incorrect installation and carrying out of non authorised modifications will result in the annulment by the manufacturer of the guarantee that it supplies with the burner.

The damages resulting from improper installation, use and failure to comply with the instructions supplied by the manufacturer.The occurrence of any of the following circustances may cause explosions, polluting unburnt gases (example: carbon monoxide CO), burns, serious harm to people, animals and things:

- Failure to comply with one of the WARNINGS in this chapter
- Incorrect handling, installation, adjustment or maintenance of the burner
- Incorrect use of the burner or incorrect use of its parts or optional supply

SPECIAL INSTRUCTIONS FOR BURNERS

a Make the following checks:

- • the burner should be installed in a suitable room, with ventilation openings complying with the requirements of the regulations in force, and sufficient for good combustion;
- • only burners designed according to the regulations in force should be used;
- • this burner should be employed exclusively for the use for which it was designed;
- • before connecting the burner, make sure that the unit rating is the same as delivery mains (electricity, gas oil, or other fuel);
- • observe caution with hot burner components. These are, usually, near to the flame and the fuel pre-heating system, they become hot during the unit operation and will remain hot for some time after the burner has stopped.

When the decision is made to discontinue the use of the burner, the user shall have qualified personnel carry out the following operations:

a • remove the power supply by disconnecting the power cord from the mains;

b • disconnect the fuel supply by means of the hand-operated shutoff valve and remove the control handwheels from their spindles.

Special warnings

- Make sure that the burner has, on installation, been firmly secured to the appliance, so that the flame is generated inside the appliance firebox.
- Before the burner is started and, thereafter, at least once a year, have qualified personnel perform the following operations:
  - a set the burner fuel flow rate depending on the heat input of the appliance;
  - b set the flow rate of the combustion-supporting air to obtain a combustion efficiency level at least equal to the lower level required by the regulations in force;
  - c check the unit operation for proper combustion, to avoid any harmful or polluting unburnt gases in excess of the limits permitted by the regulations in force;
  - d make sure that control and safety devices are operating properly;
  - e make sure that exhaust ducts intended to discharge the products of combustion are operating properly;
  - f on completion of setting and adjustment operations, make sure that all mechanical locking devices of controls have been duly tightened;
  - g make sure that a copy of the burner use and maintenance instructions is available in the boiler room.
- In case of a burner shut-down, reser the control box by means of the RESET pushbutton. If a second shut-down takes place, call the Technical Service, without trying to RESET further.
- The unit shall be operated and serviced by qualified personnel only, in compliance with the regulations in force.

GENERAL INSTRUCTIONS DEPENDING ON FUEL USED

ELECTRICAL CONNECTION

- For safety reasons the unit must be efficiently earthed and installed as required by current safety regulations.
- It is vital that all saftey requirements are met. In case of any doubt, ask for an accurate inspection of electrics by qualified personnel, since the manufacturer cannot be held liable for damages that may be caused by failure to correctly earth the equipment.
- Qualified personnel must inspect the system to make sure that it is adequate to take the maximum power used by the equipment shown on the equipment rating plate. In particular, make sure that the system cable cross section is adequate for the power absorbed by the unit.
- No adaptors, multiple outlet sockets and/or extension cables are permitted to connect the unit to the electric mains.
- An omnipolar switch shall be provided for connection to mains, as required by the current safety regulations.
- The use of any power-operated component implies observance of a few basic rules, for example:
  - do not touch the unit with wet or damp parts of the body and/or with bare feet;
  - do not pull electric cables;
  - do not leave the equipment exposed to weather (rain, sun, etc.) unless expressly required to do so;
  - do not allow children or inexperienced persons to use equipment;
- The unit input cable shall not be replaced by the user. In case of damage to the cable, switch off the unit and contact qualified personnel to replace.

When the unit is out of use for some time the electric switch supplying all the power-driven components in the system (i.e. pumps, burner, etc.) should be switched off.

FIRING WITH GAS, LIGHT OIL OR OTHER FUELS GENERAL

General Warnings

- The burner shall be installed by qualified personnel and in compliance with regulations and provisions in force; wrong installation can cause injuries to people and animals, or damage to property, for which the manufacturer cannot be held liable.
- Before installation, it is recommended that all the fuel supply system pipes be carefully cleaned inside, to remove foreign matter that might impair the burner operation.
- Before the burner is commissioned, qualified personnel should inspect the following:
  - a the fuel supply system, for proper sealing;
  - b the fuel flow rate, to make sure that it has been set based on the firing rate required of the burner;
  - c the burner firing system, to make sure that it is supplied for the designed fuel type;
  - d the fuel supply pressure, to make sure that it is included in the range shown on the rating plate;
  - e the fuel supply system, to make sure that the system dimensions are adequate to the burner firing rate, and that the system is equipped with all the safety and control devices required by the regulations in force.
- When the burner is to remain idle for some time, the fuel supply tap or taps should be closed.

Special instructions for using gas

Have qualified personnel inspect the installation to ensure that:

- a the gas delivery line and train are in compliance with the regulations and provisions in force;
- b all gas connections are tight;
- c the boiler room ventilation openings are such that they ensure the air supply flow required by the current regulations, and in any case are sufficient for proper combustion.

- Do not use gas pipes to earth electrical equipment.
- Never leave the burner connected when not in use. Always shut the gas valve off.
- In case of prolonged absence of the user, the main gas delivery valve to the burner should be shut off.

BURER DATA PLATE

For the following information, please refer to the data plate:

- Burner type and burner model: must be reported in any communication with the supplier
- Burner ID (serial number): must be reported in any communication with the supplier
- Date of production (year and month)
- Information about fuel type and network pressure

Consump

Type	--
Model	--
Year	--
S.Number	--
Output	--
Oil Flow	--
Fuel	--
Category	--
Gas Pressure	--
Viscosity	--
El.Supply	--
El.Consump.	--
Fan Motor	--
Protection	--
Drwaing n°	--
P.I.N.	--

Precautions if you can smell gas

a do not operate electric switches, the telephone, or any other item likely to generate sparks;

b immediately open doors and windows to create an air flow to purge the room;

c close the gas valves;

d contact qualified personnel.

- Do not obstruct the ventilation openings of the room where gas appliances are installed, to avoid dangerous conditions such as the development of toxic or explosive mixtures.

Using oil pressure gauges

Generally, pressure gauges are equipped with a manual valve. Open the valve only to take the reading and close it immediately afterwards.

SYMBOLS USED

	WARNING	Failure to observe the warning may result in irreparable damage to the unit or damage to the environment
	DANGER!	Failure to observe the warning may result in serious injuries or death.
	WARNING	Failure to observe the warning may result in electric shock with lethal consequences.

BURNER SAFETY

The burners- and the configurations described below - comply with the regulations in force regarding health, safety and the environment. For more in-depth information, refer to the declarations of conformity that are an integral part of this Manual.

.

DANGER! Incorrect motor rotation can seriously damage property and injure people.

.Do not touch any mechanical moving parts with your hands or any other part of your body. Injury hazard

Do not touch any parts containing fuel (i.e. tank and pipes). Scalding hazard

Do not use the burner in situations other than the ones provided for in the data plate.

Do not use fuels other than the ones stated.

Do not use the burner in potentially explosive environments.

Do not remove or by-pass any machine safety devices.

Do not remove any protection devices or open the burner or any other component while the burner is running.

Do not disconnect any part of the burner or its components while the burner is running.

Untrained staff must not modify any linkages.

- After any maintenance, it is important to restore the protection devices before restarting the machine.
- All safety devices must be kept in perfect working order.
- Personnel authorized to maintain the machine must always be provided with suitable protections.

ATTENTION: while running, the parts of the burner near the generator (coupling flange) are subject to overheating. Where necessary, avoid any contact risks by wearing suitable PPE.

Safety and prevention

- Opening or tampering with the burner components is not allowed, apart from the parts requiring maintenance.
- Only those parts envisaged by the manufacturer can be replaced.

DIRECTIVES AND STANDARDS

Gas - Light oil burners

European directives

2016/426/UE (appliances burning gaseous fuels)
2014/35/UE (Low Tension Directive)
2014/30/UE (Electromagnetic compatibility Directive)
2006/42/CE (Machinery Directive)

Harmonized standards

UNI EN 676 (Automatic forced draught burners for gaseous fuels)
UNI EN 267-2011 (Automatic forced draught burners for liquid fuels)
EN 55014-1 (Electromagnetic compatibility- Requirements for house hold appliances, electric tools and similar apparatus)
EN 60204-1:2006 (Safety of machinery – Electrical equipment of machines.)
CEI EN 60335-1 (Specification for safety of household and similar electrical appliances);
CEI EN 60335-2-102 (Household and similar electrical appliances. Safety. Particular requirements for gas, oil and solid-fuel burning appliances having electrical connections).
UNI EN ISO 12100:2010(Safety of machinery - General principles for design - Risk assessment and risk reduction);

Industrial burners

European directives

2006/42/CE (Machinery Directive)
2014/35/UE (Low Tension Directive)
2014/30/UE (Electromagnetic compatibility Directive)
2006/42/CE (Machinery Directive)

Harmonized standards

EN 746-2 (Industrial thermoprocessing equipment - Part 2: Safety requirements for combustion and fuel handling systems)
EN 55014-1 (Electromagnetic compatibility- Requirements for house hold appliances, electric tools and similar apparatus)
EN 60204-1:2006 (Safety of machinery – Electrical equipment of machines.)
CEI EN 60335-1 (Specification for safety of household and similar electrical appliances);
UNI EN ISO 12100:2010 (Safety of machinery - General principles for design - Risk assessment and risk reduction);

PART I: SPECIFICATIONS

BURNERS FEATURES

Note: the figure is indicative only

1 Control panel with startup switch
2 Combustion head adjusting ring nut
3 Electrical panel
4 Cover
5 Blast tube + Combustion head
6 Flange
7 Actuator
8 Silencer
9 Gas train
10 Pump motor
11 Fan motor
12 Photocell
13 Air pressure switch
14 Pomp

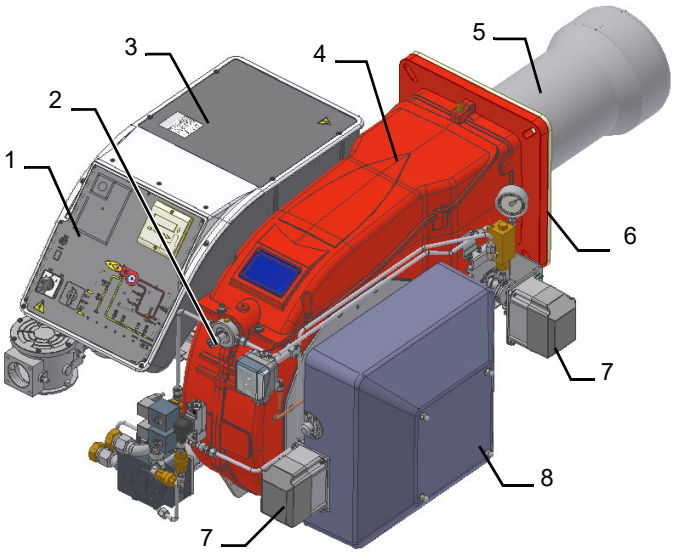

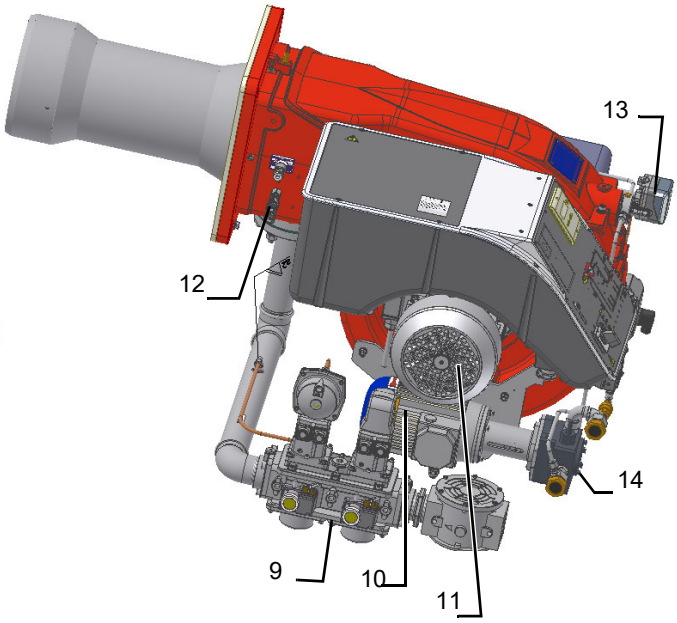

Gas operation: the gas coming from the supply line, passes through the valves group provided with filter and governor. This one forces the pressure in the utilisation limits. The actuators move proportionally the air damper and the gas butterfly valve, in order to achieve the optimisation of the gas flue values, as to get an efficient combustion.

Light oil operation: the fuel coming from the supply line, is pushed by the pump to the nozzle and then into the combustion chamber, where the mixture between fuel and air takes place and consequently the flame.
In the burners, the mixture bertween fuel and air, to perform clean and efficient combustion, is activated by atomisation of oil into very small particles. This process is achieved making pressurised oil passing through the nozzle.
The pump main function is to transfer oil from the tank to the nozzle in the desired quantity and pressure. To adjust this pressure, pumps are provided with a pressure regulator (except for some models for which a separate regulating valve is provided). Other pumps are provided with two pressure regulators: one for the high and one for low pressure (in double-stage systems with one nozzle).

The adjustable combustion head can improve the burner performance. The combustion head determines the energetic quality and the geometry of the flame. Fuel and comburent are routed into separated ways as far as the zone of flame generation (combustion chamber). The control panel, placed on the burner front side, shows each operating stage.

Burner model identification

Burners are identified by burner type and model. Burner model identification is described as follows.

Type	G380A	Model	MG.	PR.	SR.	*.	A.	1.	65.	ES.
	(1)		(2)	(3)	(4)	(5)	(6)	(7)	(8)	(9)

1	BURNER TYPE	**G258A, G335A, G380A, G400A**
2	FUEL	MG - Natural gas-Light oil
3	OPERATION (Available versions)	PR - Progressive, MD - Fully modulating
4	BLAST TUBE	SR = Standard blast tube + ABS polymer (silenced) air intake LR = Extended blast tube + ABS polymer (silenced) air intake
5	DESTINATION COUNTRY	* - see data plate
6	BURNER VERSION	A - Standard Y - Special
7	EQUIPMENT	0 = 2 gas valves 1 = 2 gas valves + gas proving system 7 = 2 gas valves + maximum gas pressure switch 8 = 2 gas valves + gas proving system + maximum gas pressure switch
8	GAS CONNECTION	50 = Rp2 65 = DN65 80 = DN80 100 = DN100
9	MICRO-PROCESSOR CONTROL	ES = with no O_2 trim control, with no VSD control EO = with O_2 trim control, with no VSD control EI = with no O_2 trim control, with VSD control EK = with O_2 trim control, with VSD control

Fuel

The burner technical specifications, described in this manual, refer to natural gas (calorific net value Hi = 9,45 kWh/Stm^3, density ρ = 0,717 Kg/Stm^3). For different fuel such as LPG, town gas and biogas, multiply the values of flow and pressure by th corrective factors shown in the table below.

Fuel	Hi (KWh/Stm^3)	ρ (kg/Stm^3)	f_Q	f_p
LPG	26,79	2,151	0,353	0,4
Town gas	4,88	0,6023	1,936	3,3
Biogas	6,395	1,1472	1,478	3,5

For example, to obtain the flow and pressure values for the biogas:

$$Q_{biogas} = Q_{naturalGas} \cdot 1,478$$

$$p_{biogas} = p_{naturalGas} \cdot 3,5$$

ATTENTION! The combustion head type and the settings depend on the fuel. The burner must be used only for its intended purpose specified in the burner data plate .

ATTENTION! The corrective factors in the above table depend on the gas composition, so on the calorifc value and the density of the gas. The above value can be taken only as reference.

Fuel

DANGER! The burner must be used only with the fuel specified in the burner data plate.

Type	--
Model	--
Year	--
S.Number	--
Output	--
Oil Flow	--
Fuel	--
Category	--
Gas Pressure	--
Viscosity	--
El.Supply	--
El.Consump.	--

Technical Specifications

BURNER TYPE		G258A	G335A	G380A	G400A
Output	min. - max. kW	165 - 2580	280 - 3350	295 - 3800	580 - 4000
Fuel		MG - Natural gas-Light oil			
Category		(see next paragraph)			
Gas rate- Natural gas	min.- max. (Stm^3/h)	17,5 - 273	30 - 354	31 - 402	61 - 402
Gas pressure	mbar	(see Note 2)			
Light oil rate	min. - max. kg/h	13,9 - 218	24 - 282	25 - 320	49 - 337
Light oil train inlet pressure	max. bar	2			
Light Oil viscosity	cSt @ 40 °C	2 - 7,4			
Light Oil density	kg/m^3	840			
Power supply triphase		220 V/ 230 V 3~ / 380 V/ 400 V 3N ~ 50 Hz			
Auxiliary Power supply		220 V/ 230 V 2~ / 220 V / 230 V 1N ~ 50 Hz			
Total power consumption	kW	5,6	7,1	9,1	
Pump motor	kW	1,1	1,1	1,1	
Electric motor	kW	4,0	5,5	7,5	
Protection		IP40			
Operation		Progressive - Fully modulating			
Gas train 50	Valves size / Gas connection	50 / DN50			
Gas train 65		65 / DN65			
Gas train 80		80 / DN80			
Gas train 100		100 / DN100			
Operating temperature	°C	-10 ÷ +50			
Storage Temperature	°C	-20 ÷ +60			
Working service		Intermitent			

Note1:	**All gas flow rates are referred to Stm^3 / h (1.013 mbar absolute pressure, 15 °C temperature) and are valid for G20 gas (net calorific value H_i = 34,02 MJ / Stm^3); for L.P.G. (net calorific value H_i = 93,5 MJ / Stm^3)**
Note2:	**Maximum gas pressure = 360 mbar (with Dungs MBDLE)** **= 500 mbar (with Siemens VGD or Dungs MultiBloc MBE)** **Minimum gas pressure = see gas curves.**
Note3:	**Burners are suitable only for indoor operation with a maximum relative humidity of 80 %**
Note4:	**with electrode**

(*) NOTE ON THE BURNER WORKING SERVICE: LMV2x automatically stops after 24h of continuous working. The device immediatelystarts up, automatically. LMV3x performs countinuous operation (with electrode only).

Gas categories and countries of application

GAS CATEGORY	COUNTRY
I_{2H}	AT, ES, GR, SE, FI, IE, HU, IS, NO, CZ, DK, GB, IT, PT, CY, EE, LV, SI, MT, SK, BG, LT, RO, TR, CH
I_{2E}	LU, PL
$I_{2E(R)B}$	BE
I_{2EK}	NL
I_{2ELL}	DE
I_{2Er}	FR

Overall dimensions (mm)

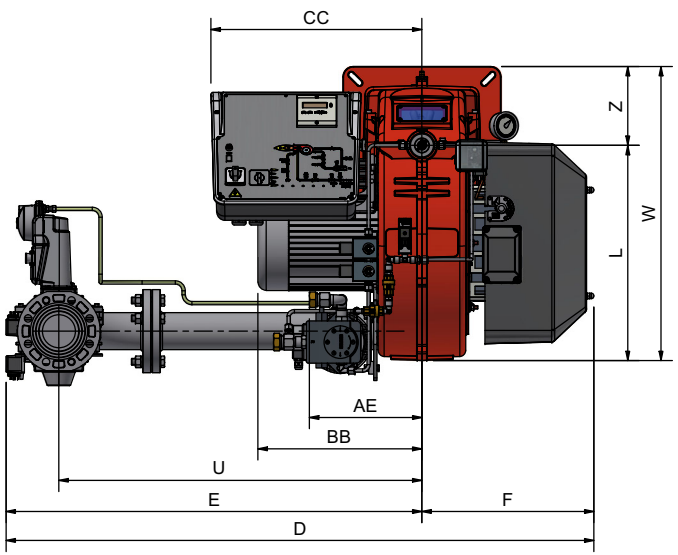

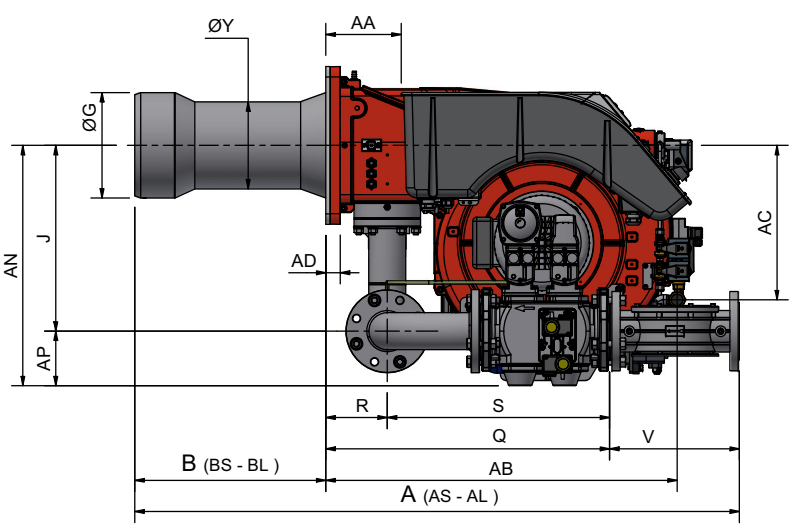

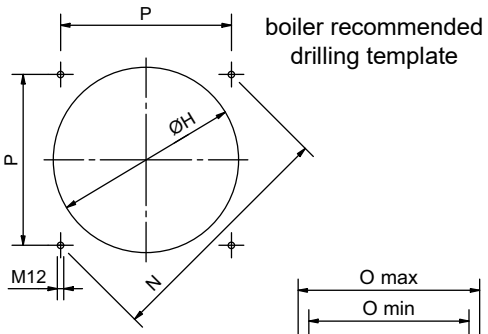

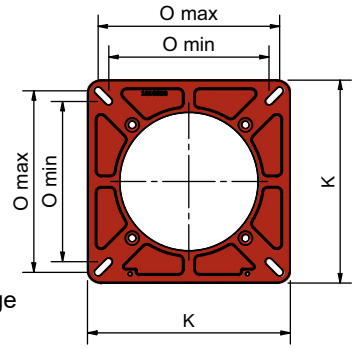

TIPO	DN	A (AS)	AA	AB	AC	AD	AE	AN	AP	B (BS)	BB	C	CC	D	E	F	G	H	J	K	L	M	N	O min	O max	P	Q	R	S	U	V	W	Y	Z
G258A	50	1367	181	850	372	35	271	550	100	460	391	907	509	1116	725	391	254	290	450	380	518	M12	453	300	340	320	533	148	384	624	190	708	210	190
G258A	65	1384	181	850	372	35	271	564	117	460	391	924	509	1362	971	391	254	290	447	380	518	M12	453	300	340	320	636	148	487	845	292	708	210	190
G258A	80	1456	181	850	372	35	271	579	132	460	391	996	509	1393	1002	391	254	290	447	380	518	M12	453	300	340	320	687	148	538	875	310	708	210	190
G258A	100	1605	181	850	372	35	271	592	145	460	391	1145	509	1476	1085	391	254	290	447	380	518	M12	453	300	340	320	791	148	642	942	353	708	210	190
G335A	50	1547	181	850	372	35	271	550	100	460	395	1087	509	1139	725	414	254	290	450	380	518	M12	453	300	340	320	533	148	384	624	190	708	210	190
G335A	65	1547	181	850	372	35	271	564	117	460	395	1087	509	1385	971	414	254	290	447	380	518	M12	453	300	340	320	636	148	487	845	292	708	210	190
G335A	80	1547	181	850	372	35	271	579	132	460	395	1087	509	1416	1002	414	254	290	447	380	518	M12	453	300	340	320	687	148	538	875	310	708	210	190
G335A	100	1547	181	850	372	35	271	592	145	460	395	1087	509	1499	1085	414	254	290	447	380	518	M12	453	300	340	320	791	148	642	942	353	708	210	190
G380A	50	1486	181	850	372	35	271	550	100	490	399	996	509	1139	725	414	265	300	450	380	518	M12	453	300	340	320	533	148	384	624	190	708	228	190
G380A	65	1486	181	850	372	35	271	564	117	490	399	996	509	1385	971	414	265	300	447	380	518	M12	453	300	340	320	636	148	487	845	292	708	228	190
G380A	80	1486	181	850	372	35	271	579	132	490	399	996	509	1416	1002	414	265	300	447	380	518	M12	453	300	340	320	687	148	538	875	310	708	228	190
G380A	100	1486	181	850	372	35	271	592	145	490	399	996	509	1499	1085	414	265	300	447	380	518	M12	453	300	340	320	791	148	642	942	353	708	228	190
G400A	50	1496	181	850	372	35	271	550	100	500	471	996	509	1139	725	414	304	345	450	380	518	M12	453	300	340	320	533	148	384	624	190	708	228	190
G400A	65	1496	181	850	372	35	271	564	117	500	471	996	509	1385	971	414	304	345	447	380	518	M12	453	300	340	320	636	148	487	845	292	708	228	190
G400A	80	1496	181	850	372	35	271	579	132	500	471	996	509	1416	1002	414	304	345	447	380	518	M12	453	300	340	320	687	148	538	875	310	708	228	190
G400A	100	1496	181	850	372	35	271	592	145	500	471	996	509	1499	1085	414	304	345	447	380	518	M12	453	300	340	320	791	148	642	942	353	708	228	190

B*: SPECIAL blast tube lengths must be agreed with **Cib Unigas**

BS = standard blast tube BL = long blast tube DN = gas valves size

3I2MG-21 v0 Hydraulic diagram

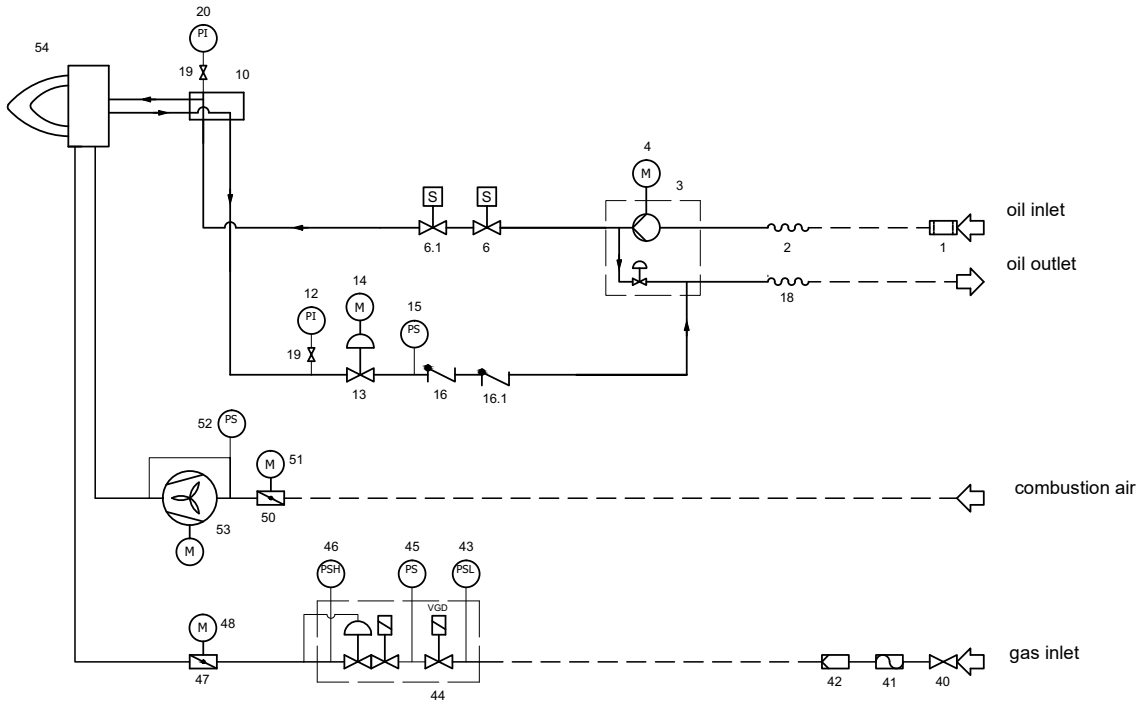

BY BURNER CONSTRUCTOR

BY OTHERS

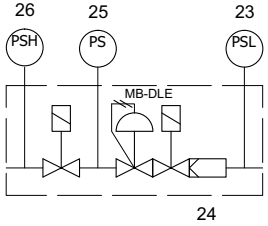

According to the gas train size and the burner type, MB-DLE safety valves are supplied. In this case, the item 42 is integrated in the valves. See the following drawing.

POS	LEGEND
	OIL TRAIN
1	Filter
2	Flexible hose
3	Pump and pressure governor
4	Electrical motor
6	Solenoid valve
6.1	Solenoid valve
10	Oil distributor
12	Pressure gauge
13	Pressure governor
15	Pressure switch
16	One-way valve
16.1	One-way valve
18	Flexible hose
19	Manual valve
20	Pressure gauge
	MAIN GAS TRAIN
23	Pressure switch - PGMIN
24	Safety valve with built in gas governor
25	Proving system pressure switch - PGCP
26	Pressure switch - PGMAX
40	Manual valve
41	Bellows unit
42	Filter
44	Safety valve with built in gas governor
45	Proving system pressure switch - PGMIN - LT
46	Pressure switch - PGMAX
47	Butterfly valve
51	Actuator
	COMBUSTION AIR TRAIN
50	Air damper
51	Actuator
52	Pressure switch - PA
53	Draught fan with electromotor
54	Burner

Note: The following POS are optional: 19, 20, 40, 41, 46

How to read the burner "Performance curve"

To check if the burner is suitable for the boiler to which it must be installed, the following parameters are needed:

- furnace input, in kW or kcal/h (kW = kcal/h/860);
- backpressure (data are available on the boiler ID plate or in the user's manual).

Example:

Furnace input: 600kW

Backpressure: 4 mbar

In the "Performance curve" diagram, draw a vertical line matching the furnace input value and an horizontal line matching the backpressure value. The burner is suitable if the intersection point A is inside the performance curve.

Data are referred to standard conditions: atmospheric pressure at 1013 mbar, ambient temperature at 15° C.

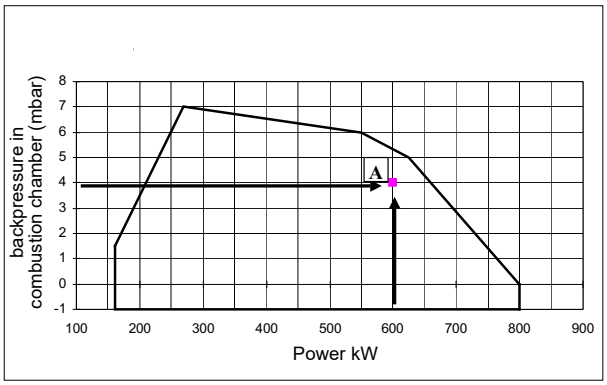

Checking the proper gas train size

To check the proper gas train size, it is necessary to the available gas pressure value upstream the burner's gas valve. Then subtract the backpressure. The result is called **pgas.** Draw a vertical line matching the furnace input value (600kW, in the example), quoted on the x-axis, as far as intercepitng the network pressure curve, according to the installed gas train (DN65, in the example). From the interception point, draw an horizontal line as far as matching, on the y-axis, the value of pressure necessary to get the requested furnace input. This value must be lower or equal to the **pgas** value, calculated before.

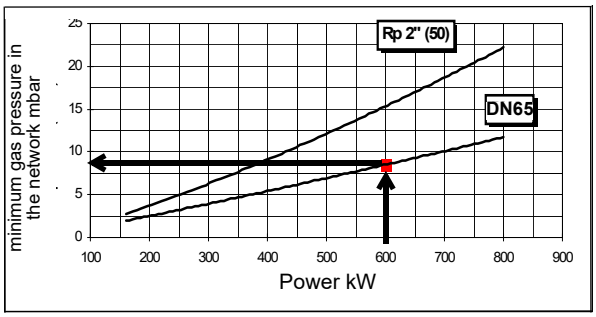

Performance Curves

G258A MG

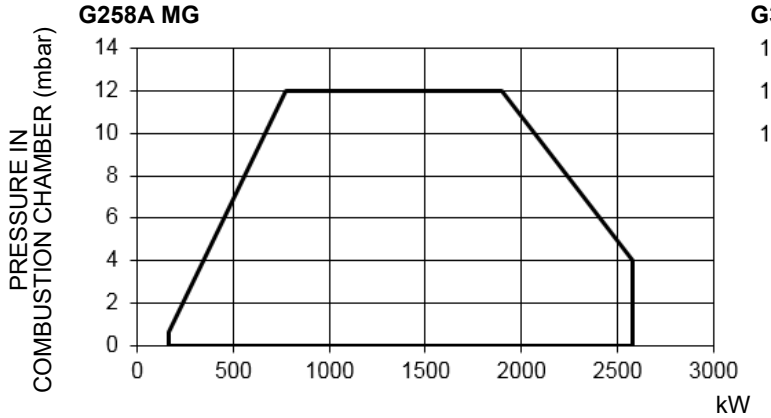

G335A MG

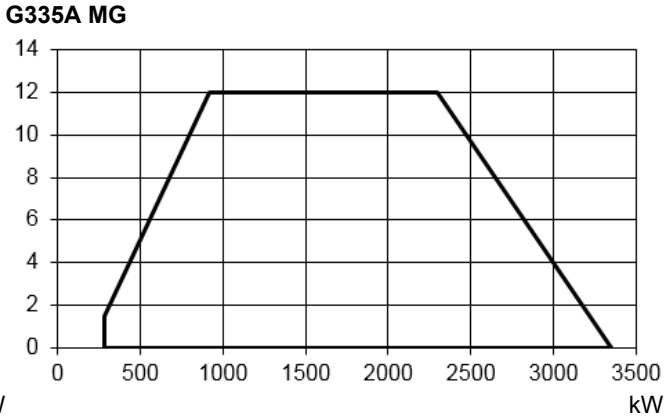

G380A MG

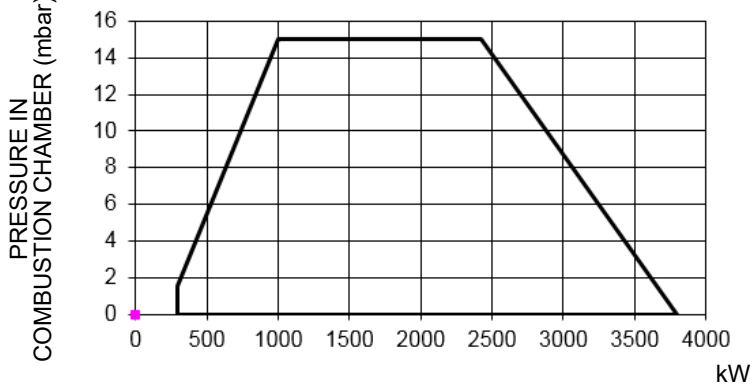

G400A MG

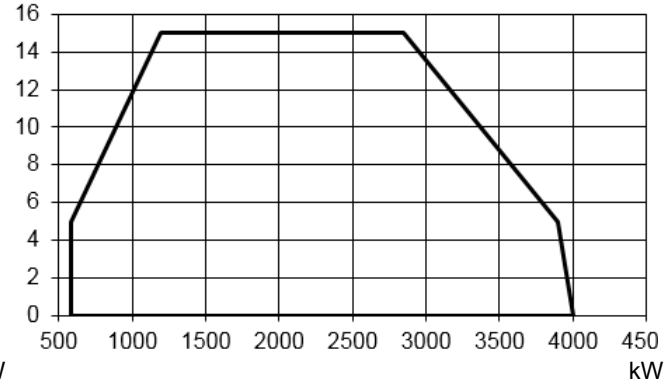

To get the input in kcal/h, multiply value in kW by 860.

Data are referred to standard conditions: atmospheric pressure at 1013mbar, ambient temperature at 15° C

NOTE: The performance curve is a diagram that represents the burner performance in the type approval phase or in the laboratory tests, but does not represent the regulation range of the machine. On this diagram the maximum output point is usually reached by adjsuting the combustion head to its “MAX” position (see paragraph “Adjusting the combustion head”); the minimum output point is reached setting the combustion head to its “MIN” position. During the first ignition, the combustion head is set in order to find a compromise between the burner output and the generator specifications, that is why the minimum output may be different from the Performance curve minimum

Pressure in the Network / gas flow rate curvesPerformance Curves

G258A MG

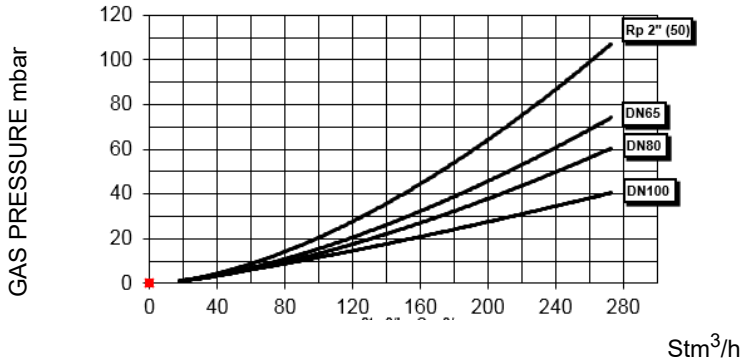

G335A MG

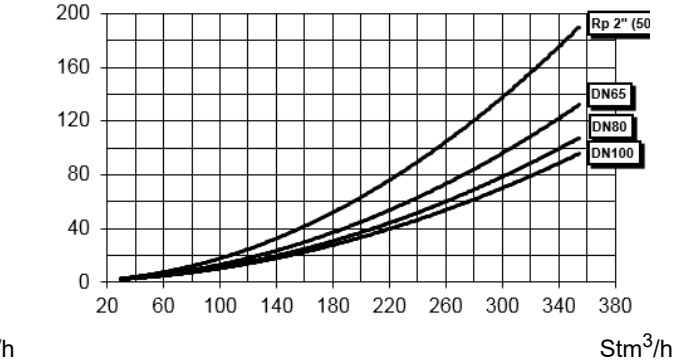

G380A MG

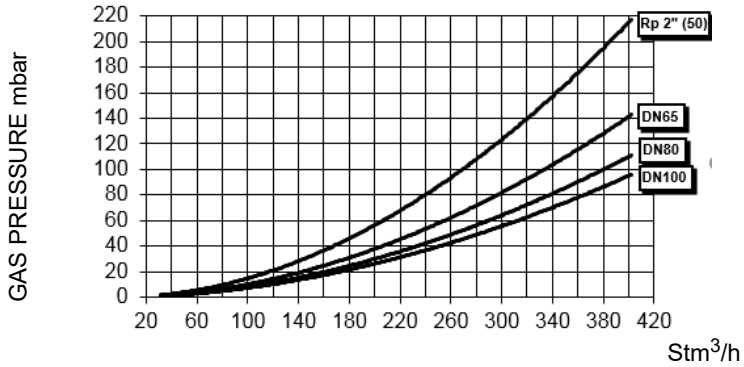

G400A MG

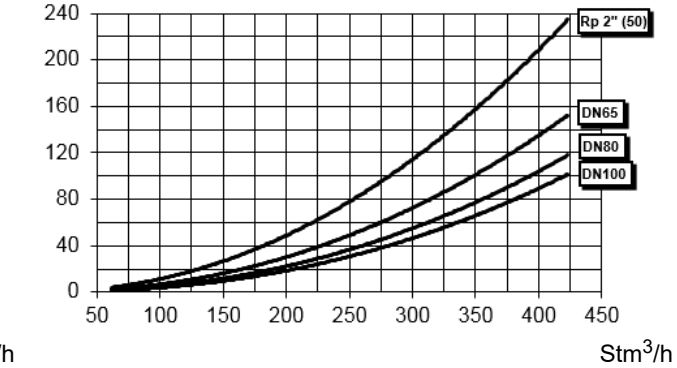

ATTENTION: the gas rate value is quoted on the x-axis, the related network pressure is quoted on the y-axis (pressure value in the combustion chamber is not included). To know the minimum pressure at the gas train inlet, necessary to get the requested gas rate, add the pressure value in the combustion chamber to the value read on the y-axis.

The values in the diagrams refer to **natural gas** with a calorific value of 8125 kcal/Stm^3 (15°C, 1013 mbar) and a density of 0.714 kg/Stm^3 .

The values in the diagrams refer to **GPL** with a calorific value of 22300 kcal/Stm^3 (15°C, 1013 mbar) and a density of 2.14 kg/Stm^3. When the calorific value and the density change, the pressure values should be adjusted accordingly.

$$\Delta p2 = \Delta p1 \quad * \left(\frac{Q2}{Q1}\right)^2 * \left(\frac{\rho 2}{\rho 1}\right)$$

Where:

$p1$	Natural gas pressure shown in diagram
$p2$	Real gas pressure
$Q1$	Natural gas flow rate shown in diagram
$Q2$	Real gas flow rate
$\rho 1$	Natural gas density shown in diagram
$\rho 2$	Real gas density

Combustion head gas pressure curves

Combustion head gas pressure depends on gas flow and combustion chamber backpressure. When backpressure is subtracted, i depends only on gas flow, provided combustion is properly adjusted, flue gases residual O2 percentage complies with “Recommendec combustion values” table and CO in the standard limits). During this stage, the combustion head, the gas butterfly valve and the actuator are at the maximum opening. Refer to , showing the correct way to measure the gas pressure, considering the values o pressure in combustion chamber, surveyed by means of the pressure gauge or taken from the boiler’s Technical specifications.
.

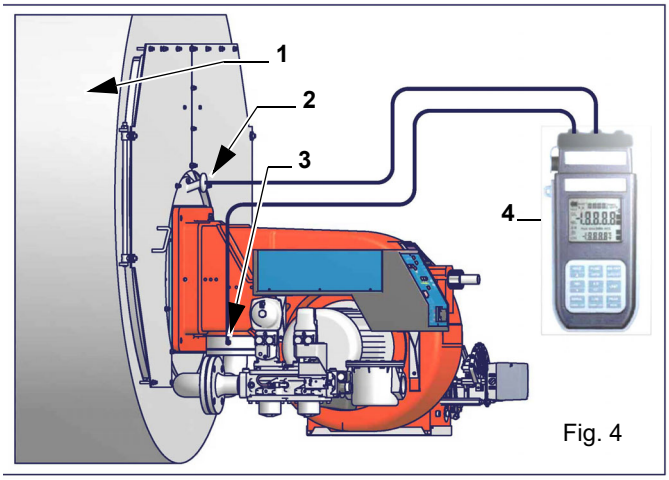

Fig. 4

Note: the figure is indicative only.Key

1 Generator
2 Pressure outlet on the combustion chamber
3 Gas pressure outlet on the butterfly valve
4 Differential pressure gauge

ATTENTION: THE BURNED GAS RATE MUST BE READ AT THE GAS FLOW METER. WHEN IT IS NOT POSSIBLE, THE USER CAN REFERS TO THE PRESSURE-RATE CURVES AS GENERAL INFORMATION ONLY.

Measuring gas pressure in the combustion head

In order to measure the pressure in the combustion head, insert the pressure gauge probes: one into the combustion chamber’s pressure outlet to get the pressure in the combustion chamber and the other one into the butterfly valve’s pressure outlet of the burner. Or the basis of the measured differential pressure, it is possible to get the maximum flow rate: in the pressure - rate curves (showed on the next paragraph), it is easy to find out the burner’s output in Stm^3/h (quoted on the x axis) from the pressure measured in the combustior head (quoted on the y axis). The data obtained must be considered when adjusting the gas flow rate.

Gas pressure burner head vs natural gas flow rate

Curves are referred to pressure = 0 mbar in the combustion chamber!

G258A M-

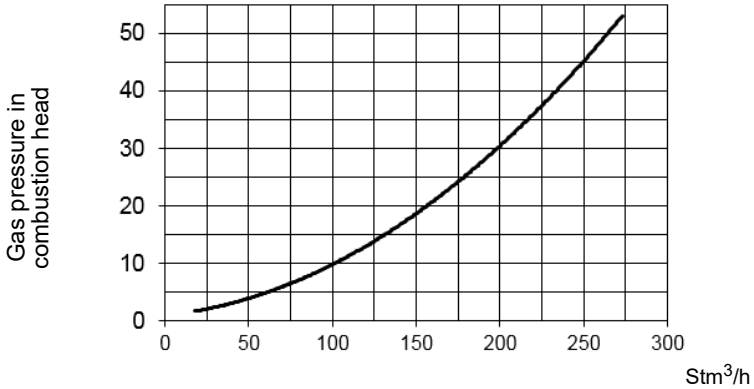

G335A M-

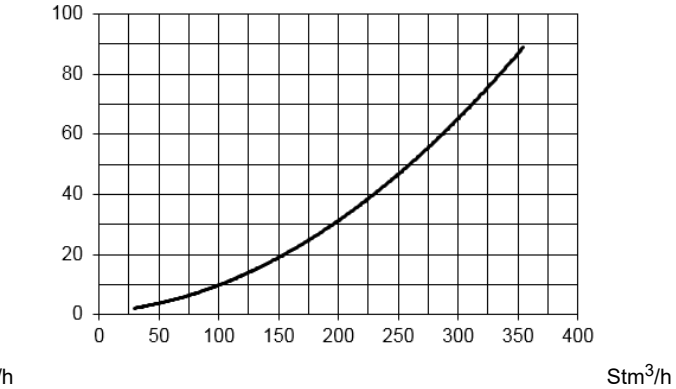

G380A M-

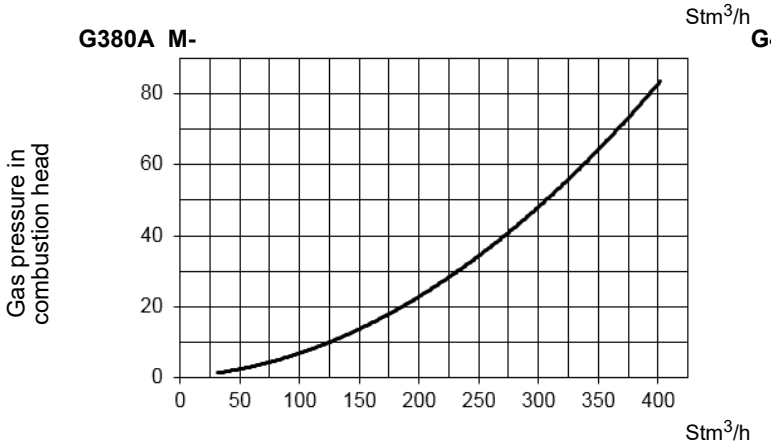

G400A M-

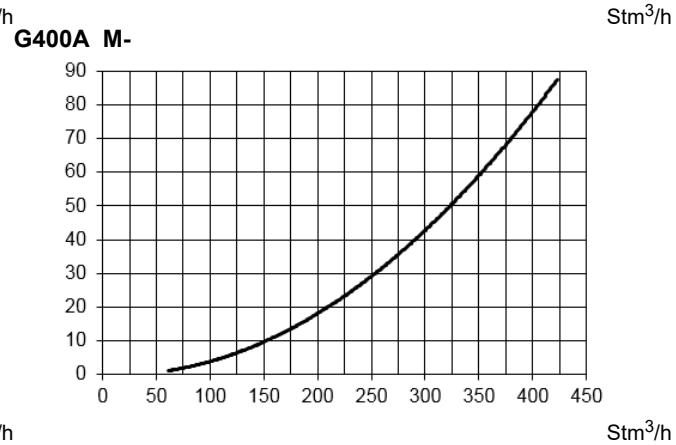

PART II: INSTALLATION

MOUNTING AND CONNECTING THE BURNER

Transport and storage

If the product must be stored, avoid humid and corrosive places. Observe the temperatures stated in the burner data table at the beginning of this manual. The packages containing the burners must be locked inside the means of transport in such a way as to guarantee the absence of dangerous movements and avoid any possible damage.

In case of storage, the burners must be stored inside their packaging, in storerooms protected from the weather. Avoid humid or corrosive places and respect the temperatures indicated in the burner data table at the beginning of this manual.

Packing

The burners are despatched in wooden crates whose dimensions are:

- **1600mm x 1000mm x 860 mm (L x P x H)**

Packing cases of this type are affected by humidity and are not suitable for stacking.

The following are placed in each packing case:

- burner with detached gas train;
- gasket or ceramic fibre plait (according to burner type) to be inserted between the burner and the boiler;
- envelope containing this manual and other documents.
- oil flexible hoses;

To get rid of the burner's packing, follow the procedures laid down by current laws on disposal of materials.

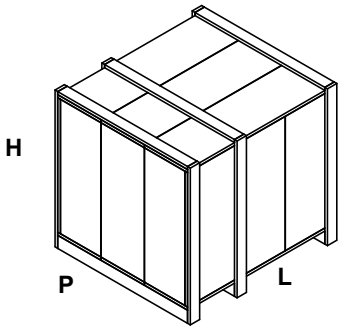

Handling the burner

WARNING! The handling operations must be carried out by specialised and trained personnel. If these operations are not carried out correctly, the residual risk for the burner to overturn and fall down still persists. To move the burner, use means suitable to support its weight (see paragraph "Technical specifications").
The unpacked burner must be lifted and moved only by means of a fork lift truck.

The burner is mounted on a support provided for handling the burner by means of a fork lift truck: the forks must be inserted into the A anb B ways. Remove the stirrup only once the burner is installed to the boiler.

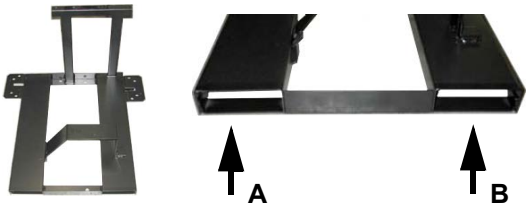

Fitting the burner to the boiler

To install the burner into the boiler, proceed as follows:

1 make a hole on the closing door of the combustion chamber as described on paragraph “Overall dimensions”)
2 place the burner to the boiler: lift it up and handle it according to the procedure described on paragraph “Handling the burner”;
3 place the 4 stud bolts (5) on boiler’s door, according to the burner drilling template described on paragraph “Overall dimensions”;
4 fasten the 4 stud bolts;
5 place the gasket on the burner flange;
6 install the burner into the boiler;
7 fix the burner to the stud bolts, by means of the fixing nuts, according to the next picture.
8 After fitting the burner to the boiler, ensure that the gap between the blast tube and the refractory lining is sealed with appropriate insulating material (ceramic fibre cord or refractory cement).

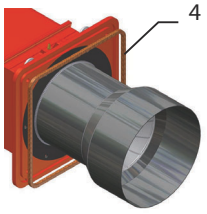

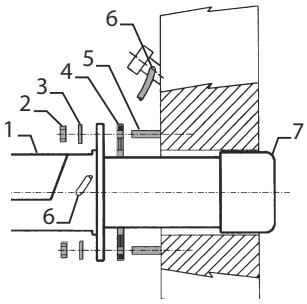

Keys

1 Burner
2 Fixing nut
3 Washer
4 Sealing gasket
5 Stud bolt
7 Blast tube

Matching the burner to the boiler

The burners described in this manual have been tested with combustion chambers that comply with EN676 regulation and whose dimensions are described in the diagram . In case the burner must be coupled with boilers with a combustion chamber smaller in diameter or shorter than those described in the diagram, please contact the supplier, to verify that a correct matching is possible, with respect of the application involved. To correctly match the burner to the boiler verify the type of the blast tube . Verify the necessary input and the pressure in combustion chamber are included in the burner performance curve; otherwise the choice of the burner must be revised consulting the burner manufacturer. To choose the blast tube lenght follow the instructions of the boiler manufacturer. In absence of these consider the following:

- Cast-iron boilers, three pass flue boilers (with the first pass in the rear part): the blast tube must protrude no more than **Dist** = 100 mm into the combustion chamber. (please see the picture below)
- Pressurised boilers with flame reversal: in this case the blast tube must penetrate **Dm** 50 ÷ 100 mm into combustion chamber in respect to the tube bundle plate.(please see the picture below)

A: ceramic fibre
B: refractory wall

Dist. = 100 mm
DM = 50 ÷ 100 mm

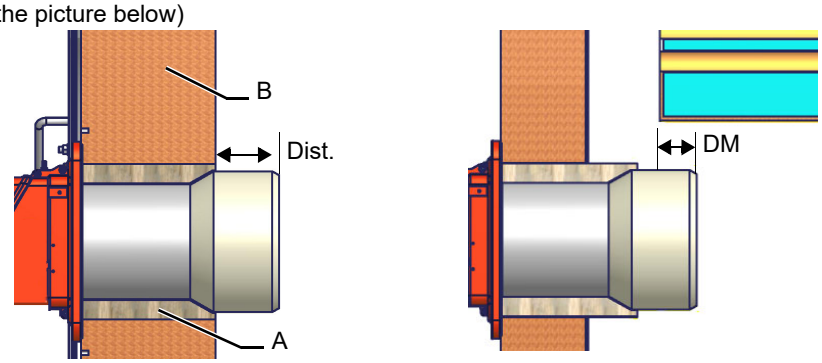

WARNING! Carefully seal the free space between blast tube and the refractory lining with ceramic fibre rope or other suitable means.

The length of the blast tubes does not always allow this requirement to be met, and thus it may be necessary to use a suitably-sized spacer to move the burner backwards or to design a blast tube tha suites the utilisation (please, contact the manifacturer).

GAS TRAIN CONNECTION

The following diagrams show some examples of possible gas trains with the components supplied with the burner and those fitted by the installer. The gas trains and the connection of the burner to the fuel supply line must be done in accordance with current local regulations.

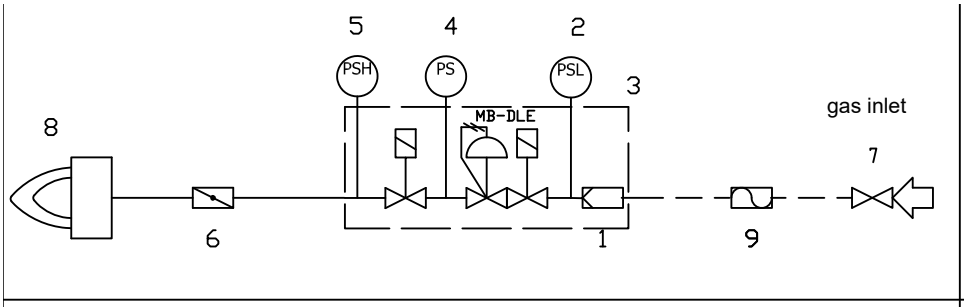

con valvole MB-DLE

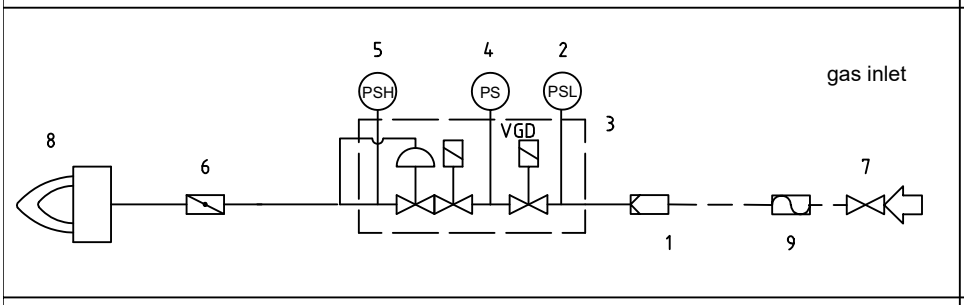

con valvole VGD

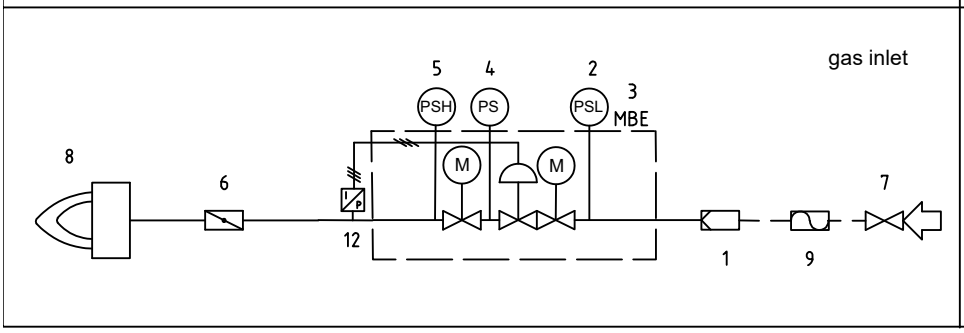

con valvole MBE

Legend:

1 Filter
2 Low pressure switch - PGMIN
3 Safety valve
4 Proving system pressure switch - PGCP (*optional)
5 High pressure switch PGMAX: mandatory for MBE, optional for VGD and DMV-DLE
6 Butterfly valve
7 Upstream manual valve
8 Main burner
9 Antivibration joint (*optional)
12 MBE pressure sensor

GAS TRAIN CONNECTIONS

WARNING: before executing the connections to the gas pipe network, be sure that the manual cutoff valves are closed.

ATTENTION: it is recommended to mount filter and gas valves to avoid that extraneous material drops inside the valves, during maintenance and cleaning operation of the filters (both the filters outside the valves group and the ones built-in the gas valves).

ATTENTION: once the gas train is mounted, the gas proving test must be performed, according to the procedure set by laws in force.

CAUTION: The direction of gas flow must follow the arrow on the body of the components mounted on the gas ramp (valves, filters, gaskets...).

NOTE: the bellows unit, the manual cutoff valve and the gaskets are not part of the standard supply

Following the "Hydraulic Schematics" section, the figure shows the components fitted by the installer.

Keys

1	Gas filter
3	Gas valves group
9	Bellows unit
10	Manual valve
11	Gasket(a, b, c, d)

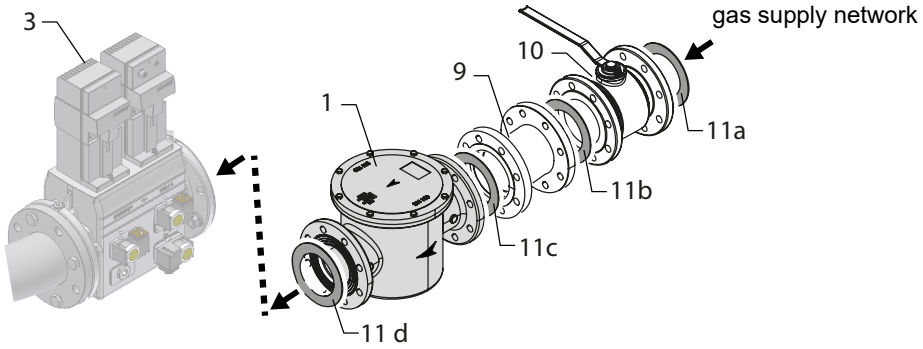

Procedure to install the double gas valve unit: **two (2) gas flanges are required; they may be threaded or flanged depending on size**

- **first step: install the flanges to prevent entry of foreign bodies in the gas line**
- **on the gas pipe, clean the already assembled parts and then install the valve unit check gas flow direction: it must follow the arrow on the valve body**
- **VGD20: make sure the O-rings are correctly positioned between the flanges and the valve**

In all cases:

- ensure that the gaskets are correctly positioned between the flanges;
- fasten all the components with screws, according to the following diagrams:
- make sure bolts on the flanges are properly tightened
- check that the connections of all components are leak .

CAUTION: Use seals suitable for the gas used.

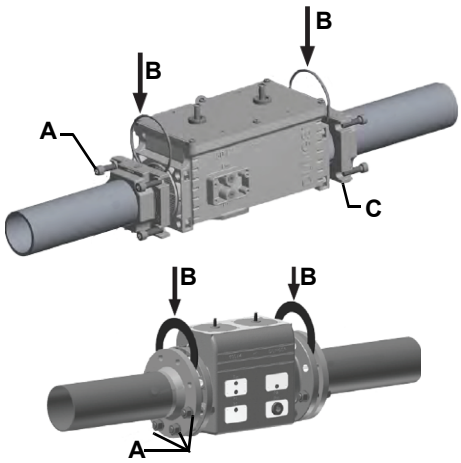

WARNING: Slowly open the fuel cock to avoid breaking the pressure regulator.

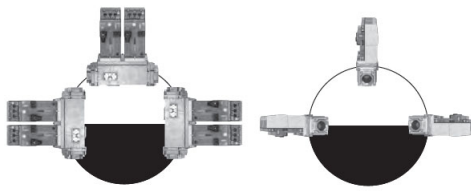

Gas Filter (if provided)

The gas filters remove the dust particles that are present in the gas, and prevent the elements at risk (e.g.: burner valves, counters and regulators) from becoming rapidly blocked. The filter is normally installed upstream from all the control and on-off devices.

ATTENTION: it is reccomended to install the filter with gas flow parallel to the floor in order to prevent dust fall on the safety valve during maintenance operation.

Once the train is installed, connect the gas valves group and pressure switches plugs.

MultiBloc MB-DLE - *Assembling the gas train*

Mounting

1 Mount flange onto tube lines: use appropriate sealing agent
2 Insert MB-DLE: note position of O rings
3 Remove MultiBloc between the threaded flanges
4 After installation, perform leakage and functional test
5 Disassembly in reverse order

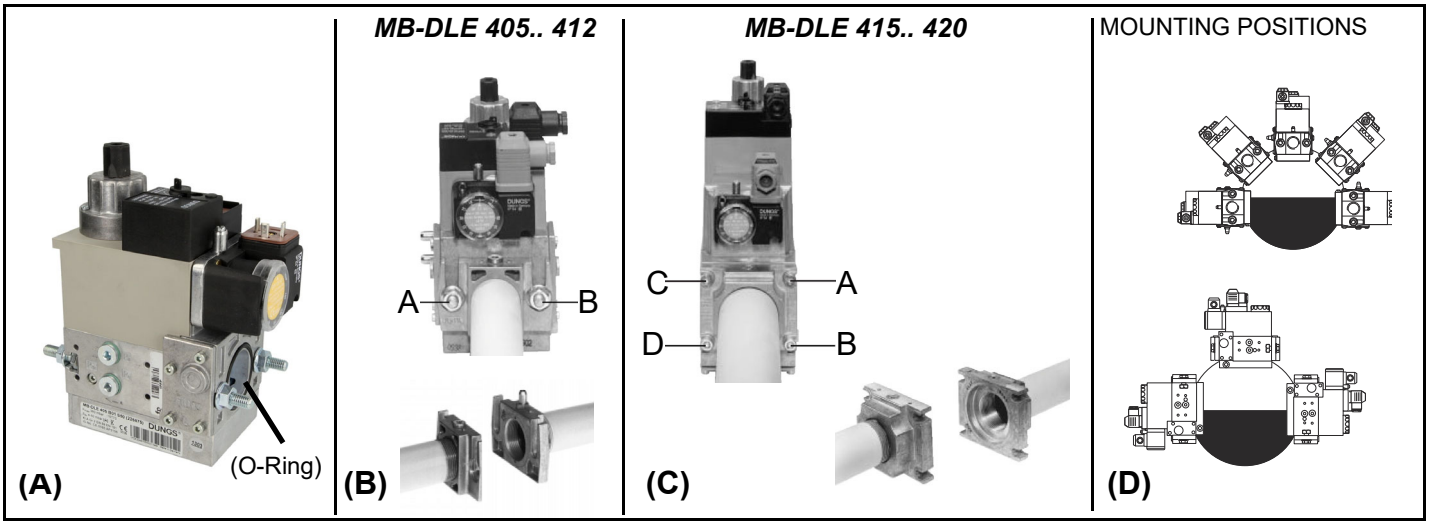

DUNGS MBE

Components and position of pressure switches

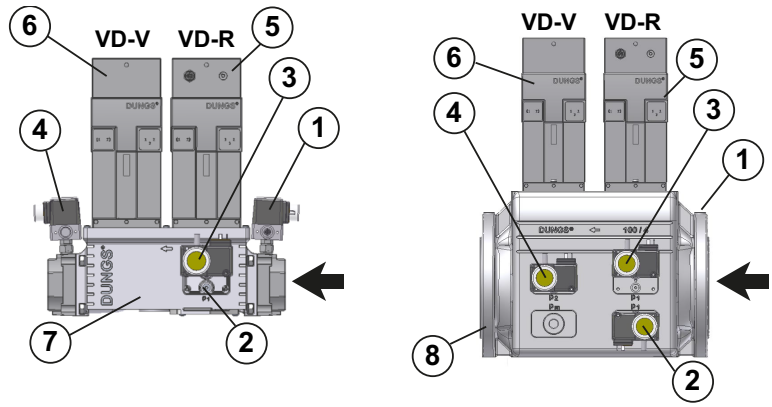

1 PGMIN minimum gas pressure switch
2 PGMIN minimum gas pressure switch (alternative to 1)
3 PGCP leakage control gas pressure switch
4 PGMAX maximum gas pressure switch
5 Actuator with integrated pressure stabiliser
6 On-Off actuator
7 Valve body (Threaded)
8 Valve body (Flange)

On equipment versions Facile VD-R must be installed upstream valve

PS pressure sensor connection to VD-R actuator and gas train

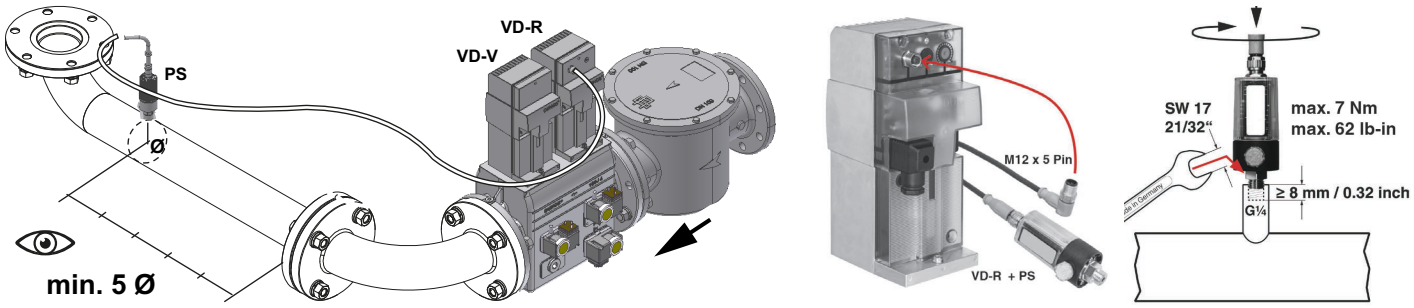

Attention: In the case of the MBE... valve, a pressure limit switch downstream of the safety valve is mandatory.

Pressure taps MultiBloc MBE

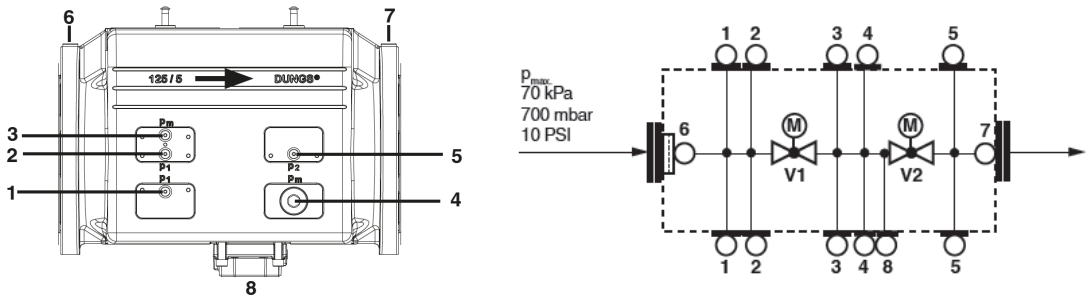

1, 2, 3, 5 Sealing plug G1/8 ISO 228

4 G3/4 for system accessories

6, 7 Sealing plug G1/4 ISO 228

8 For version VB…L only: connection for vent line

VB-2½L=1¼"NPT

VB-3L=1½"NPT

VB-4L=2"NPT

VB-5L=2"NPT

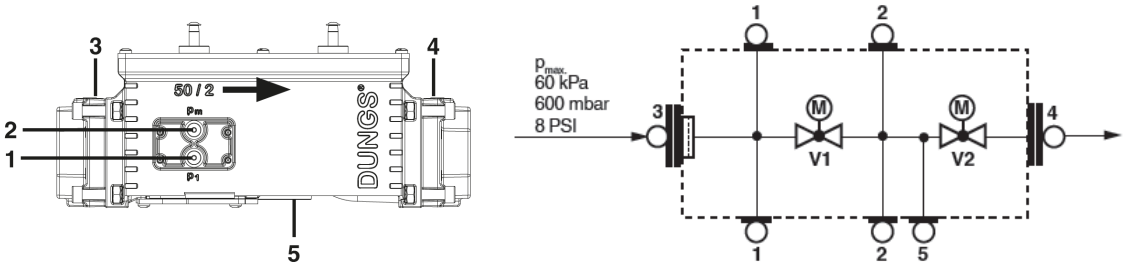

1, 2, 3, 4 Sealing plug G1/8 ISO 228

5 Locking screw
For version VB-2L only: connection for vent line **NPT 1**

Siemens VGD20.. e VGD40..

Components and position of pressure switches

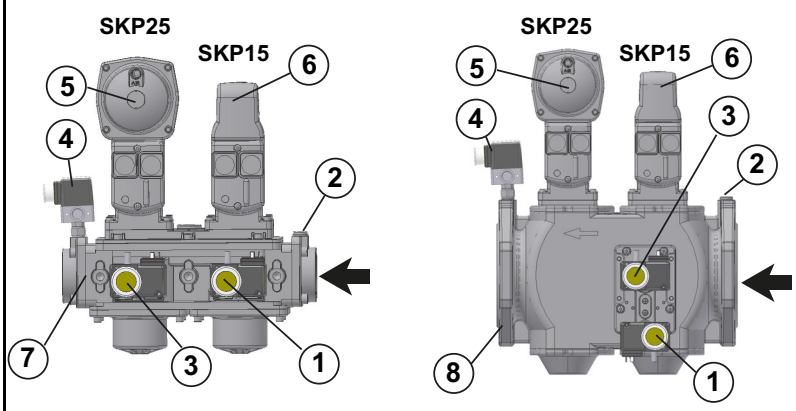

1 PGMIN minimum gas pressure switch
2 PGMIN minimum gas pressure switch (alternative to 1)
3 PGCP leakage control gas pressure switch
4 PGMAX maximum gas pressure switch
5 Actuator with integrated pressure stabiliser
6 On-Off actuator
7 Valve body (Threaded)
8 Valve body (Flange)

Connection of actuator SKP2... to gas train

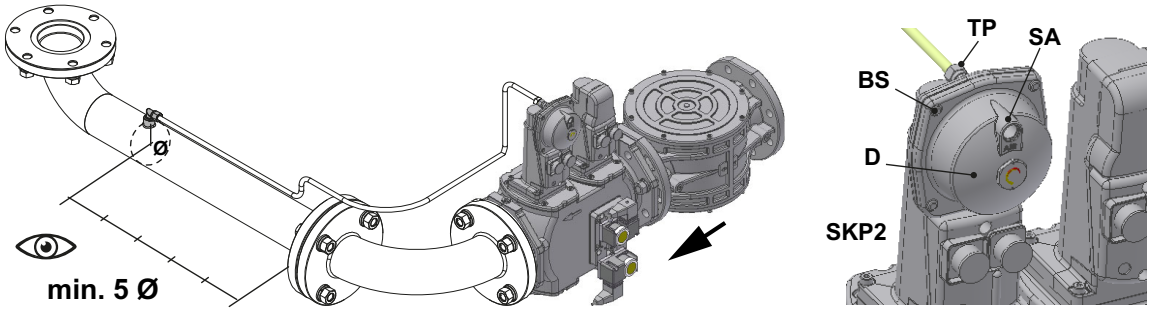

Siemens SKP2.. (pressure governor)

- Connect the reference gas pipe (**TP** in figure; 8mm-external size pipe supplied loose), to the gas pressure nipples placed on the gas pipe, downstream the gas valves: gas pressure must be measured at a distance that must be at least 5 times the pipe size.
- Leave the blowhole free (**SA** in figure). Should the spring fitted not permit satisfactory regulation, ask one of our service centres for a suitable replacement.

- D: pressure adjustment spring seat

WARNING: removing the four screws BS causes the device to be unserviceable!

version with SKP2 (built-in pressure stabilizer)Siemens VGD../VRD.. SKPx5 (Auxiliary-optional micro switch)Gas valve

If the auxiliary microswitch (POC) is required, a dedicated actuator, different from the one usually supplied, must be ordered. The connection is shown in the figure.

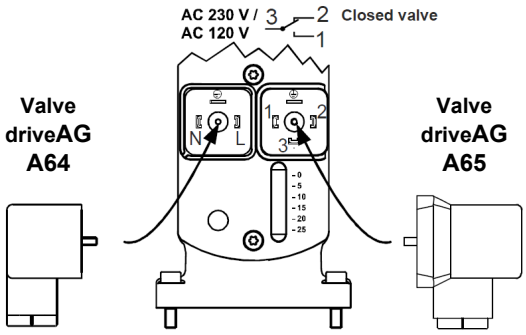

Valve driveAGA64 -
Plug connection ON-OFF
End of stroke

End of stroke
Plug connection **(POC)**

Siemens VGD *Pressure taps*

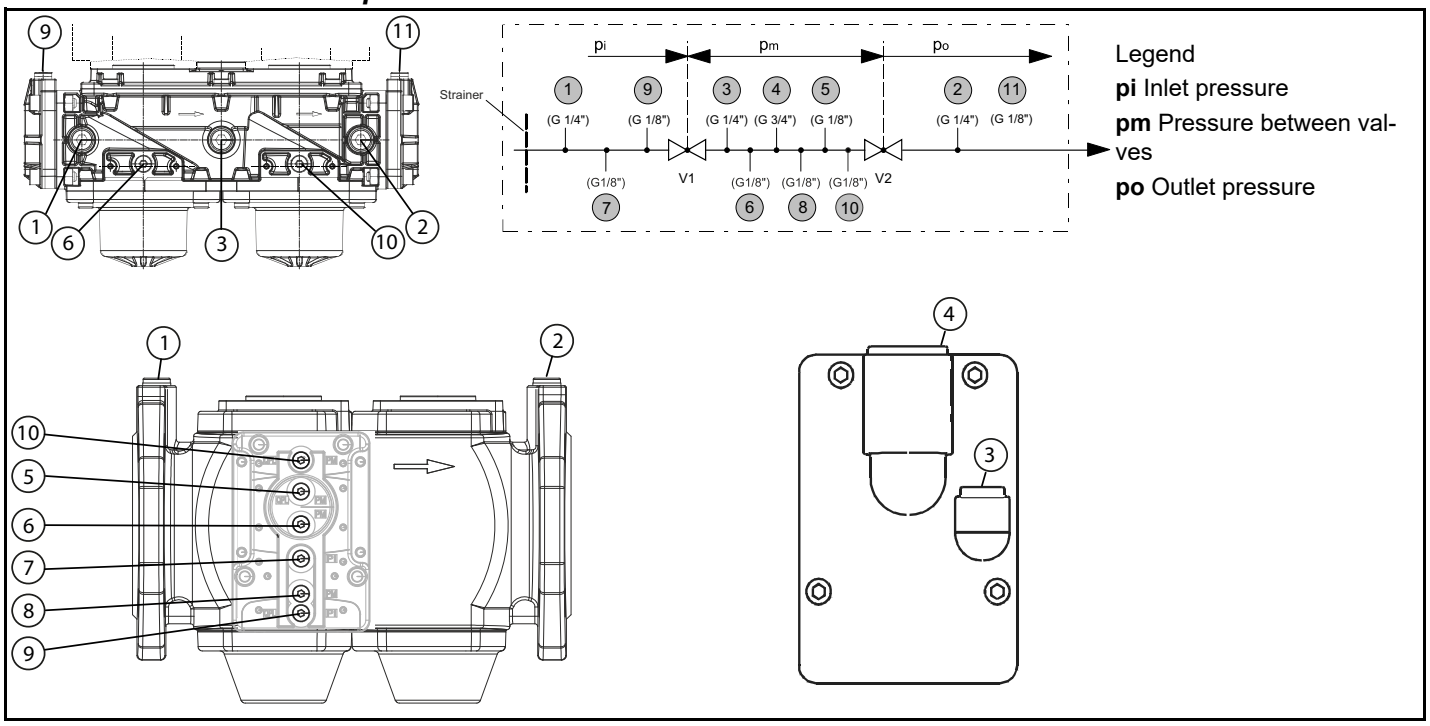

Overall dimensions (mm) - BURNERS WITH INVERTER VARIANT (if provided)

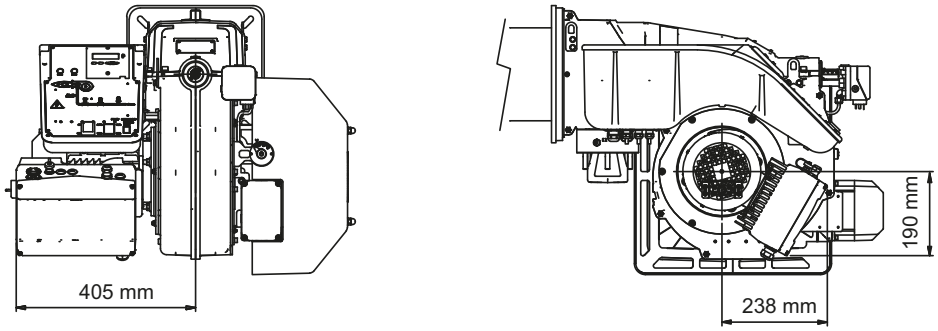

BURNERS WITH INVERTER VARIANT (if provided)

INVEOR M

DANFOSS FC101

DANFOSS FC102

The manufacturer provides:

KOSTAL: on-board or wall-mounted (in the latter case the kit is required)

DANFOSS: wall-mounted

Both can be equipped with a braking resistor.

The burner terminal box is prepared to receive certain signals (for connection to the inverter, see the dedicated connection diagram).

Input signals for the inverter depending on the equipment:	
LMV51.300 / LMV52.xxx	4÷20mA
HAGC31-CU01	4÷20mA
LMV37.400 / LMV26.300	0÷10V

The **LMV51.300 / LMV52.xxx, HAGC31-CU01 e LMV37.400/LMV26.300** electronic cam burners with fan motor driven by inverter in addition to the air and fuel adjustment curves also have a fan motor speed adjustment curve.

Generally the curve of the inverter goes from 50% to 100% of the engine revolutions. This, in addition to improving the setting of the burner also allows a saving on the consumption of the fan engine.

Terminal interface with Inverter

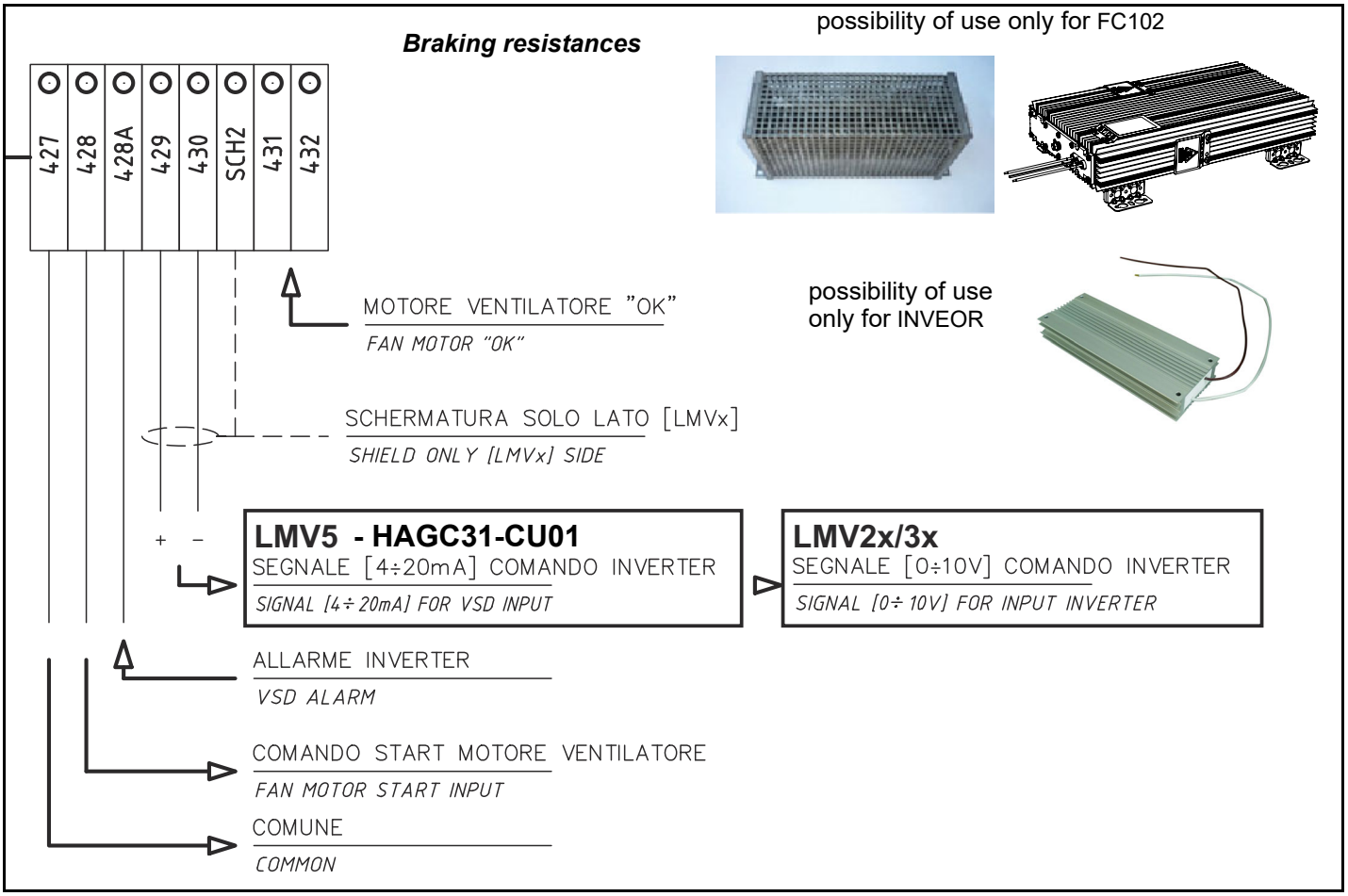

Speed Sensor ***AGG 5.310***

is a speed sensor kit used to monitor the speed of a motor. This kit is used to mount the speed sensor directly on the motor casing.

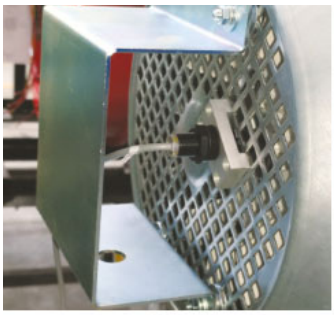

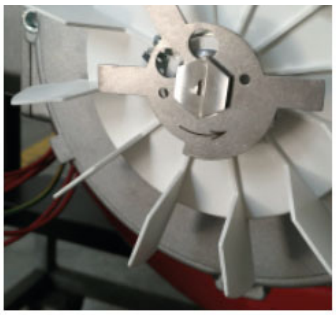

The procedures of installation fo the gas valves are showed in the next paragraphs, according to the gas train used:

Integrated proving system (burners equipped with LME7x, LMV, LDU)

This paragraph describes the integrated proving system operation sequence:

- At the beginning both the valves (EV1 and EV2) must be closed.
- Test space evacuating: EV2 valve (burner side) opens and keep this position for a preset time (td4), in order the bring the test space to ambient pressure.Test atmospheric pressure: EV2 closes and keep this position for a preset time (test time td1). The pressure switch PGCP has not to detect a rise of pressure.
- Test space filling: EV1 opens and keep this position for a preset time (td3), in order to fill the test space.
- Test gas pressure: EV1 closes and keep this position for a preset time (td2). The pressure switch PGCP has not to detect a pressure drop down.

If all of the test phases are passed the proving system test is successful, if not a burner lockout happens.

On LMV5x and LMV2x/3x and LME73 (except LME73.831BC), the valve proving can be parameterized to take place on startup, shutdown, or both.

On LME73.831BC the valve proving is parameterized to take place on startup only.

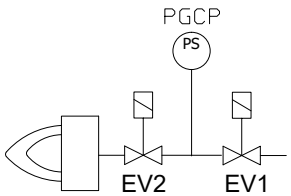

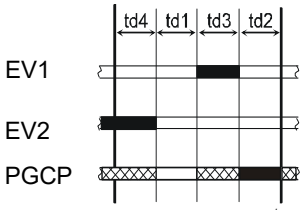

OIL TRAIN CONNECTIONS

Hydraulic diagrams for light oil supplying circuits

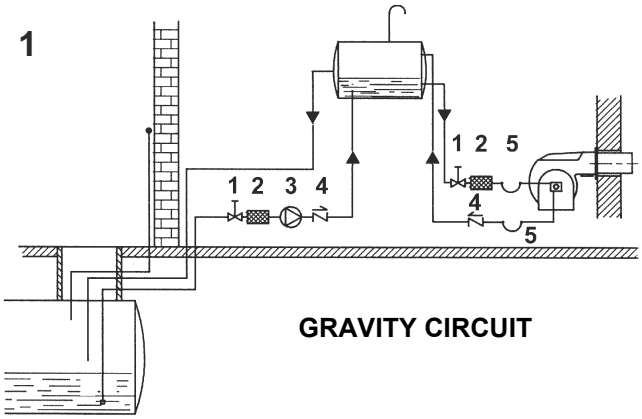

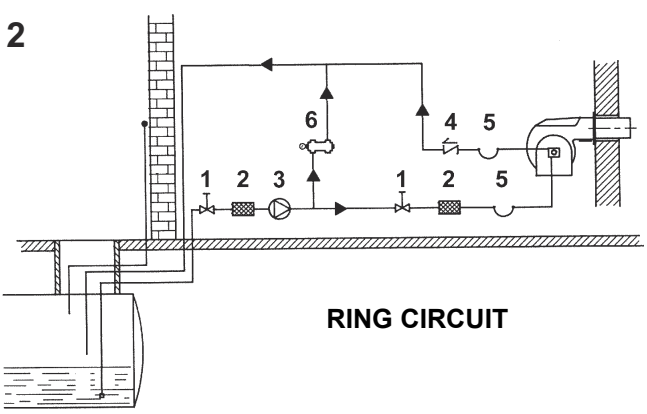

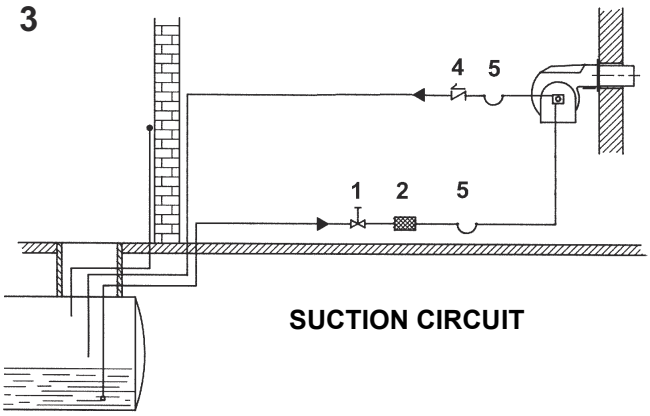

Key

1 Manual valve
2 Light oil filter
3 Light oil feeding pump
4 One way valve
5 Flexible hoses
6 Relief valve

NOTE: in plants where gravity or ring feed systems are provided, install an automatic interception device.

Installation diagram of light oil pipes

please read carefully the “warnings” chapter at the beginning of this manual.

Fig. 4 - Double-pipe system

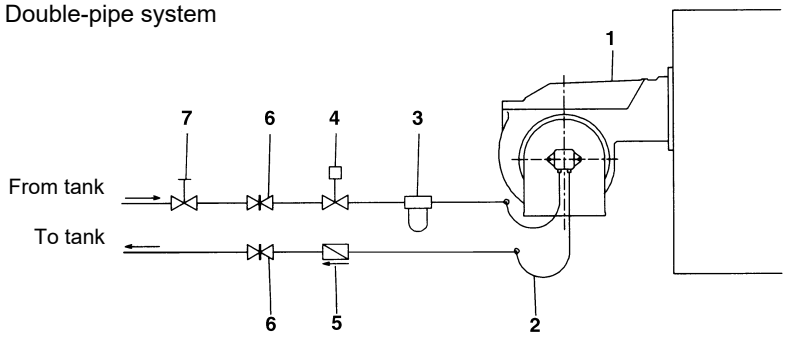

The burner is supplied with filter and flexible hoses, all the parts upstream the filter and downstream the return flexible hose, must be installed by the customer. As far as the hoses connection, see the related paragraph.

Key

1 Burner
2 Flexible hoses (fitted)
3 Light oil filter (fitted)
4 Automatic interceptor (*)
5 One-way valve (*)
6 Gate valve
7 Quick-closing gate-valve (outside the tank or boiler rooms)

(*) Only for installations with gravity, siphon or forced circulation feed systems. If the device installed is a solenoid valve, a timer must be installed to delay the valve closing. The direct connection of the device without a timer may cause pump breaks.

Depending on the installed pump, it is possible to design the plant for single or double pipe feeding line

Single-pipe system: a single pipe drives the oil from the tank to the pump’s inlet. Then, from the pump, the pressurised oil is driven to the nozzle: a part comes out from the nozzle while the othe part goes back to the pump. In this system, the by-pass plug, if provided, must be removed and the optional return port, on the pump’s body, must be sealed by steel plug and washer.

Double-pipe system: as for the single pipe system, a pipe that connects the tank to the pump’s inlet is used besides another pipe that connects the pump’s return port to the tank, as well. The excess of oil goes back to the tank: this installation can be considered self-bleeding. If provided, the inside by-pass plug must be installed to avoid air and fuel passing through the pump.

Burners come out from the factory provided for double-pipe systems. They can be suited for single-pipe system (recommended in the case of gravity feed) as decribed before.To change from a 1-pipe system to a 2-pipe-system, insert the by-pass plug **G** (as for ccw-rotation- referring to the pump shaft).

Caution: Changing the direction of rotation, all connections on top and side are reversed.**HP UHE series pumps**: a kit (Art.-Nr.: 0841211) is required for the transition from 2-pipe to 1-pipe system

Suntec T

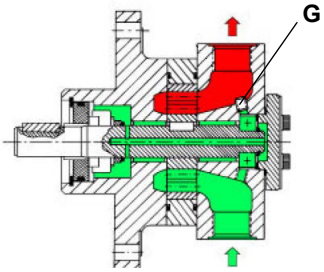

Suntec TA

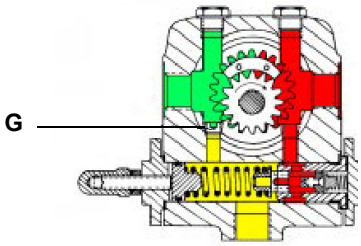

About the use of fuel pumps

- Do not use fuel with additives to avoid the possible formation over time of compounds which may deposit between the gear teeth, thus obstructing them.
- After filling the tank, wait before starting the burner. This will give any suspended impurities time to deposit on the bottom of the tank, thus avoiding the possibility that they might be sucked into the pump.
- On initial commissioning a "dry" operation is foreseen for a considerable length of time (for example, when there is a long suction line to bleed). To avoid damages inject some lubrication oil into the vacuum inlet.
- Care must be taken when installing the pump not to force the pump shaft along its axis or laterally to avoid excessive wear on the joint, noise and overloading the gears.
- Pipes should not contain air pockets. Rapid attachment joint should therefore be avoided and threaded or mechanical seal junctions preferred. Junction threads, elbow joints and couplings should be sealed with removable sg component. The number of junctions should be kept to a minimum as they are a possible source of leakage.
- Do not use PTFE tape on the suction and return line pipes to avoid the possibility that particles enter circulation. These could deposit on the pump filter or the nozzle, reducing efficiency. Always use O-Rings or mechanical seal (copper or aluminium gaskets) junctions if possible.
- An external filter should always be installed in the suction line upstream the fuel unit.

***ATTENTION**: before the burner first start, it is mandatory to fill the adduction pipes with diesel fuel and bleed out residual air bubbles. Prior to switching on the burner, check direction of rotation of the pump motor by briefly pressing the starter switch; ensure there are no anomalous sounds during equipment operation, and only then turn on the burner. Neglect to comply with this requirement will invalidate the burner warranty.*

HP-Technick UHE-A..	
Oil viscosity	3 ÷ 75 cSt
Oil temperature	0 ÷ 150°C
Min. suction pressure	- 0.45 bar to avoid gasing
Max. suction pressure	5 bar
Max. return pressure	5 bar
Rotation speed	3600 rpm max.

1. Connection for manometer 1 – delivery (M1) – G1/4
2. Connection for manometer 2 – suction (M2) – G1/4
3. Connection for manometer 3 (M3)

A. Suction connection– G1/2
D. Direct - clockwise
I. Indirect – counter clockwise
R. By-pass connection– G1/2
S. Delivery connection – G1/2
VR. After removal of cover screw: pressure regulation

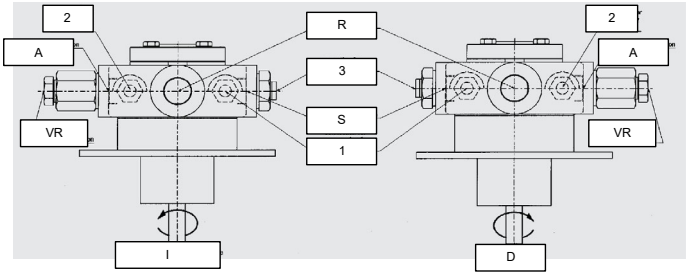

Suntec T..	
Viscosity	3 - 75 cSt
Oil temperature	0 - 150 °C
Minimum suction pressure	- 0.45bar to prevent gasing
Maximum suction pressure	5 bar
Rated speed	3600 rpm max.

Key

1 Inlet G3/4
2 Pressure gauge port G1/4
3 Vacuum gauge port to measure the inlet vacuum G1/4
4 To pressure adjusting valve G3/4

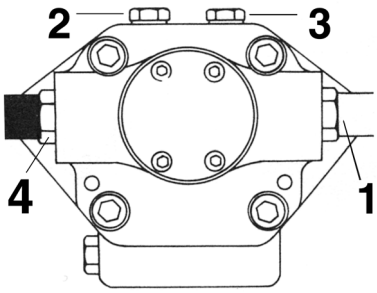

"Note: pump with “C” rotation.

Suntec TA..	
Oil viscosity	3 ÷ 75 cSt
Oil temperature	0 ÷ 150°C
Min. suction pressure	- 0.45 bar to avoid gasing
Max. suction pressure	5 bar
Max. return pressure	5 bar
Rotation speed	3600 rpm max.

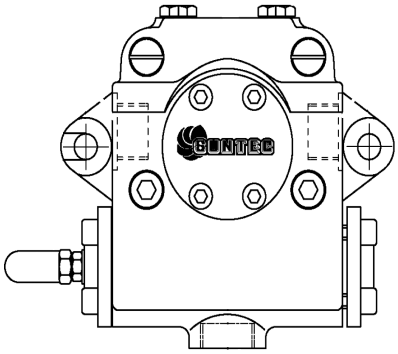

1. Inlet G1/2
2. To the nozzle G1/2
3. Return G1/2
4. Pressure gauge port G1/4
5. Vacuum gauge port G1/4
6. Pressure governor

Connecting the oil flexible hoses to the pump

To connect the flexible oil hoses to the pump, proceed as follows, according to the pump provided:

1 remove the closing nuts A and R on the inlet and return connections of the pump;

2 screw the rotating nut of the two flexible hoses on the pump **being careful to avoid exchanging the lines**: see the arrows marked on the pump.

For further information, refer to the technical documentation of the pump.

.

Suntec T+TV	Suntec TA

Diesel filters

	Item	Note	Connection	Max. operating pressure	Max. operating temperature	Filtering degree	Protec-tion
5	20151PE (*)	-	3/8”	1 bar	-20, 60 °C	100 µ	-
6	20201PL (*)	-	3/8”	1 bar	-20, 60 °C	100 µ	-
7	GA70501	-	1”	4 bar	90 °C	100 µ	IP65

(*) Supplied per pilot diesel fuel if present

ELECTRICAL CONNECTIONS

WARNING: (only for double stage and progressive burners) The burner is provided with an electrical bridge between terminals 6 and 7; when connecting the high/low flame thermostat, remove this bridge before connecting the thermostat.

Any cable connection or hook-up to the grid must be carried out by qualified, informed and trained personnel, directly coordinated and authorized by Technical Service. Always check in advance that the system electrical interlock is fitted with a safety circuit breaker.

WARNING! It is forbidden to use the fuel pipes for the execution and/or completion of the grounding

- The system must comply with the current regulations.
- Earth the system; always check in advance the connection, functionality and compliance with the health and safety principles of the earth cable. If in doubt, ask for an accurate inspection by qualified technical engineers.
- Check the connection to the grounding system.
- Do not use any extraneous conductive parts (i.e. fuel feeding pipes, metal structures ...) to connect the burner to ground.
- In connecting the supply wires to the burner MA terminal strip, ensure that the earth wire is longer than the phase and neutral wires.
- Careful not to invert the phase and neutral connections
- Fit the burner power line with an omnipolar disconnector and differential switch, a thermo-magnetic circuit breaker or fuses.
- Supply the burner with a flame retardant cable with a section suitable to the installed power (see electrical diagram enclosed), paying attention to the voltage values printed on the burner plate.
- Always check in advance the protection from overcurrents and electromagnetic interference of the power supply. If these and other values do not match the threshold data stated by the manufacturer, isolate the burner from all power sources and contact the Authorized Technical Service urgently.
- Check that the voltage of the system and burner motors match the voltage of the power grid (+/- 10%).
- Ensure the IP protection rating is consistent with the installation place and environment characteristics
- Before carrying out any operation on the machine electrical panel, open the system omnipolar disconnector and move the switch on the burner panel to OFF.

In any case:

- use suitably protected and safe burner/boiler supply and tracking cables;
- avoid using extensions, adaptors or multiple sockets.

For further information, refer to the electrical diagram.

Follow the electrical diagrams attached to the manual for the connections to the terminal strip MA.
The electrical panel is supplied complete with a terminal strip for the connection to the system electrical line and, in case of on board control panel, a plug for the connection to the modulation probe (if any).

Rotation of electric motor

Once the electrical connection of the burner is executed, remember to check the rotation of the electrical motor (pump motor if any, and fan motor) . The motor should rotate according to the “arrow” symbol on the body. In the event of wrong rotation, reverse the three-phase supply and check again the rotation of the motor.

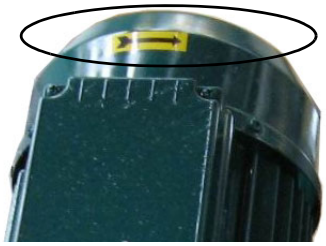

ATTENTION: check the calibration of the thermal relay sensor (+5% ÷ +10% rated value).

DANGER! Incorrect motor rotation can seriously damage property and injure people.

NOTE: the burners are supplied for three-phase 380/400/415/480 V supply, and in the case of three-phase 220/230/240 V supply it is necessary to modify the electrical connections into the terminal box of the electric motor and replace the overload tripped relay.

Note on electrical supply

In the case where the power supply of the AUXILIARIES of the phase-phase burner (without a neutral), for the flame detection it is necessary to connect the RC circuit Siemens between the terminal 2 (terminal X3-04-4 in case of LMV2x, LMV3x, LMV5x, LME7x) of the base and the earth terminal, RC466890660. For LMV5 control box, please refer to the clabeling recommendations avaible on the

Siemens CD attached to the burner

Key

C - Capacitor (22 nF , 250 V)
LME / LMV - Siemens control box
R - Resistor (1 MΩ)
M: Terminal 2 (LGB, LME), Terminal X3-04-4 (LMV2x, LMV3x, LMV5, LME7x)
RC466890660 - RC Siemens filter

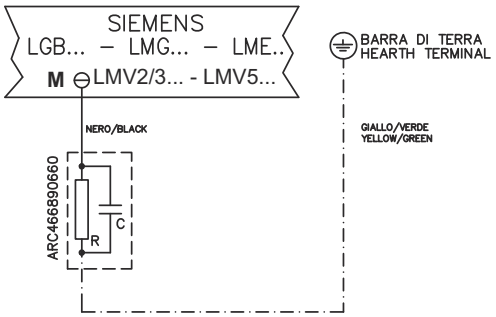

Configuration with separate electrical panel (optional)

The length of the electrical cables must comply with the provisions in the technical sheets of the equipment or the advice the company gives at the time of the offer/contract.

Provide sufficient protections for cables and connectors, taking into consideration positioning spaces and the panel-burner tracing surfaces. Always consult beforehand the electrical drawings supplied in relationship to the topography of the feeding systems.

PART III: OPERATION

IN THE EVENT OF A BLOCKAGE, THE CAUSE MUST BE ASSESSED. IF THE FLAME BACKFIRE WARNING LIGHT IS ON, IT IS IMPERATIVE TO CHECK THE INTEGRITY AND GOOD CONDITION OF THE COMBUSTION HEAD AS DESCRIBED IN THE MAINTENANCE SECTION BEFORE UNLOCKING THE APPLIANCE.

LIMITATIONS OF USE

THE BURNER IS AN APPLIANCE DESIGNED AND CONSTRUCTED TO OPERATE ONLY AFTER BEING CORRECTLY CONNECTED TO A HEAT GENERATOR (E.G. BOILER, HOT AIR GENERATOR, FURNACE, ETC.), ANY OTHER USE IS TO BE CONSIDERED IMPROPER AND THEREFORE DANGEROUS.

THE USER MUST GUARANTEE THE CORRECT FITTING OF THE APPLIANCE, ENTRUSTING THE INSTALLATION OF IT TO QUALIFIED PERSONNEL AND HAVING THE FIRST COMMISSIONING OF IT CARRIED OUT BY A SERVICE CENTRE AUTHORISED BY THE COMPANY MANUFACTURING THE BURNER.

A FUNDAMENTAL FACTOR IN THIS RESPECT IS THE ELECTRICAL CONNECTION TO THE GENERATOR'S CONTROL AND SAFETY UNITS (CONTROL THERMOSTAT, SAFETY, ETC.) WHICH GUARANTEES CORRECT AND SAFE FUNCTIONING OF THE BURNER.

THEREFORE, ANY OPERATION OF THE APPLIANCE MUST BE PREVENTED WHICH DEPARTS FROM THE INSTALLATION OPERATIONS OR WHICH HAPPENS AFTER TOTAL OR PARTIAL TAMPERING WITH THESE (E.G. DISCONNECTION, EVEN PARTIAL, OF THE ELECTRICAL LEADS, OPENING THE GENERATOR DOOR, DISMANTLING OF PART OF THE BURNER).

NEVER OPEN OR DISMANTLE ANY COMPONENT OF THE MACHINE EXCEPT FOR ITS MAINTENANCE.

TO SECURE THE MACHINE, ACT ON THE ISOLATOR SWITCH. IN CASE OF ANOMALIES THAT REQUIRED A SHUT DOWN OF THE BURNER, IT'S POSSIBLE TO ACT ON THE AUXILIARY LINE SWITCH, LOCATED ON THE BURNER FRONT PANEL.

IN CASE OF A BURNER SHUT-DOWN, RESET THE CONTROL BOX BY MEANS OF THE RESET PUSHBUTTON. IF A SECOND SHUT-DOWN TAKES PLACE, CALL THE TECHNICAL SERVICE, WITHOUT TRYING TO RESET FURTHER.

WARNING: DURING NORMAL OPERATION THE PARTS OF THE BURNER NEAREST TO THE GENERATOR (COUPLING FLANGE) CAN BECOME VERY HOT, AVOID TOUCHING THEM SO AS NOT TO GET BURNT.

DANGER! Incorrect motor rotation can seriously damage property and injure people.

DANGER: During commissioning operations, do not let the burner operate with insufficient air flow (danger of formation of carbon monoxide); if this should happen, make the gas decrease slowly until the normal combustion values are achieved.

WARNING: before starting the burner up, be sure that the manual cutoff valves are open and check that the pressure upstream the gas train complies the value quoted on paragraph "Technical specifications". Be sure that the mains switch is closed.

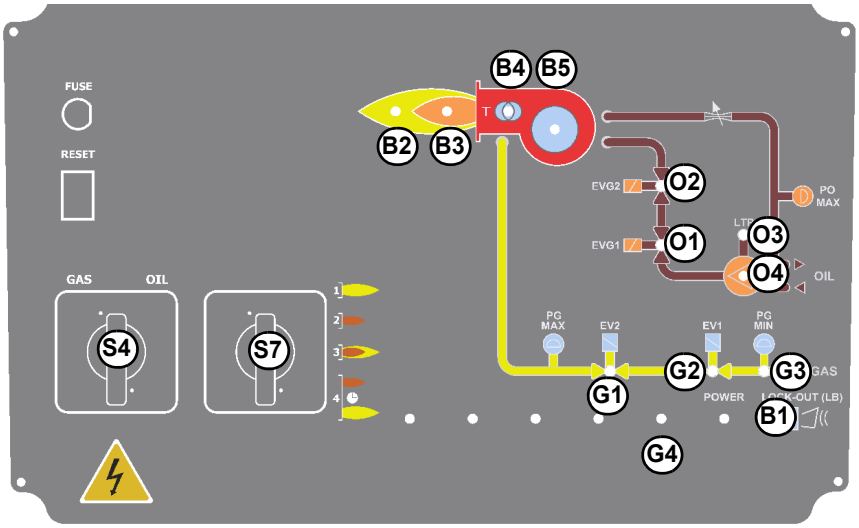

Keys

B1 Lock-out LED
B2 Hi-flame operation LED
B3 Lo-flame operation LED
B4 “Ignition transformer operation” LEDG1“EV2 opening” LED
G2 “EV1 opening” LED
G3 “Gas pressure switch signal ” LED
G4 Gas proving system lockout signalling LED
S4 Fuel selection
S7 CMF switch 0=stop 1=high flame2=low flame 3=automatic-fully modulating burnersonlyO1EVG1 solenoid valve operation LED
O2 EVG2 solenoid valve operation LED
O3 “Pump motor overload tripped” LED
O4 Oil pump in operation LED
A1 Burner Modulator (only on fully modulating burners)A2AZL..

Fuel selection:

- In order to start the burner with gas or light oil, the operator must commute the selector on the burner control panel on (1) = gas, or (2) = light oil.
  If the selector is set on (1) the gas cock must be open, while the light oil cock must be closed. Viceversa if the selector is set on (2).
  CAUTION: if the fuel chosen is oil, be sure the cutoff valves on the feed and return pipes are open.
- Check the control box is not locked; if so, reset it by means of the button on LMV panel.
- Check the series of thermostats and pressure switches turn the burner to on.

Gas operation

- At the beginning of the start-up cycle, the actuator drives the air damper to the maximum opening position, then the fan motor starts up: the pre-purge phase begins.
- At the end of the pre-purge, the air damper is driven to the ignition position, the ignition transformer is energised (signalled by the light **B4** on the front panel) then, few seconds later, the EV1 and EV2 gas valves are energised (light G1 and G2 on the front panel).
- Few seconds after the gas valves opening, the ignition transformer is de-energised and light **B4** turns to off.
- The burner operates in the low flame stage; few seconds later the two-stages operation begins and the burner output increases or decreases, driven by the external thermostats (progressive burners) or by the modulator (fully-modulating burners).

Light oil operation

- The fan motor starts and the pre-purge phase as well. Since the pre-purge phase must be carried out at the maximum air rate, the control box drives the actuator opening and when the maximum opening position is reached, the pre-purge time counting starts.
- At the end of the pre-purge time, the actuator is in the light oil ignition position: the ignition transformer is energised (lamp **B4** on); the ignitor gas valves and the light oil valves open. Few seconds after the valves opening, the transformer is de-energised and lamp **B4** turns off.
- The burner is now operating, meanwhile the actuator goes to the high flame position; after some seconds, the two-stage operation begins; the burner is driven automatically to high flame or low flame, according to the plant requirements.Operation in high or low flame is signalled by LED **B2** on the burner control panel.

The fuel is pushed into the pump to the nozzle at the delivery pressure set by the pressure governor. The solenoid valve stops the fuel immission into the combustion chamber. The fuel flow rate that is not burnt goes back to the tank through the return circuit. The nozzle is feeded at constant pressure, while the return line pressure is adjusted by means of the pressure governor controlled by an actuator..

Adjustments - brief description

The air and fuel rates adjustments must be performed at the maximum ouptput first (“high flame”): see the LMV5.. related manual..

- Check that the combustion parameters are in the suggested limits.
- Check the flow rate measuring it on the counter or, if it was not possible, verifying the combustion head pressure by means of a differential pressure gauge, as described on par. “Measuring the gas pressure in the combustion head”.
- Then, adjust the combustion values by setting the “gas/air” ratio” curvepoints (see the LMV5.. related manual).
- Set, now, the low flame output, in order to avoid the low flame output increasing too much or that the flues temperature gets too low to cause condensation in the chimney.

Adjusting procedure

Go on adjusting the burner.

Users can set only the LMV parameters that can be accessed without password: (see “Adjusting the temperature set-point”).

The Siemens AZL User Interface allows programming the Siemens LMV system and monitoring the system data.

The user interface is made of:

1. display: it showes menus and parameters
2. ESC key (previous level): it goes back to the prevoius level menu or exits the programming mode without changing data.
3. ENTER key (next level): it confirms the data changing and jumps to the next menu/parameter.
4. SELECT keys: they select a menu item and change the parameter values.

As far as the settings, see the LMV5 related manual.

By following the “air/gas ratio” curvepoints setting procedure on the LMV5.. manual, adjusting the air and gas flow rates: check, continuosly, the flue gas analisys, as to avoid combustion with little air; dose the air according to the gas flow rate change following the steps quoted below.

Once the throttle valve is completely opened, acting on the pressure stabiliser of the valves group, adjust the **gas flow rate in the high flame stage** as to meet the values requested by the boiler/utilisation:

AIR FLOW AND FUEL ADJUSTMENT

WARNING! During commissioning operations, do not let the burner operate with insufficient air flow (danger of formation of carbon monoxide); if this should happen, make the fuel decrease slowly until the normal combustion values are achieved.
WARNING! the combustion air excess must be adjusted according to the values in the following chart.

Recommended combustion parameters		
Fuel	Recommended (%) CO_2	Recommended (%) O_2
Natural gas	9 ÷ 10	3 ÷ 4.8
Light oil	11.5 ÷ 13	2.9 ÷ 4.9
LPG	11 ÷ 12	2.8 ÷ 4.3

Adjustments - brief description

- The air and fuel rates adjustments must be performed at the maximum ouptput first ("high flame"): see the LMV related manual.
- Check that the combustion parameters are in the suggested limits.
- Check the flow rate measuring it on the counter or, if it was not possible, verifying the combustion head pressure by means of a differential pressure gauge, as described on par. "Measuring the gas pressure in the combustion head".
- Then, adjust the combustion values by setting the "gas/air" ratio" curvepoints (see the LMV related manual).
- Set, now, the low flame output (according to the procedure described on the "Siemens LMV manual") in order to avoid the low flame output increasing too much or that the flues temperature gets too low to cause condensation in the chimney.

Drive the burner to high flame stage (please refer to the LMVx documentation attached to this manual).

Start-up procedure

1 Turn the burner on.
2 the LMV control box starts the system test cycle: the AZL display shows the **System Test** message; at the end of the test, it shows the main page and the system stops (the safety chain is open) waiting for the startup enabling signal (standby - Program phase no. 12)

Setpoint	80°C
Act.value	78°C
Fuel	GAS
Standby	12

Main page

3 check the fan motor rotation (see related paragraph).
4 make the safety chain enabling the system to start up
5 the combustion cycle starts: the system will show the operating stages

- Prepurging (program phase no.30)
- Driving to ignition position (program phase no.36)
- Ignition position (program phase no.38)
- Fuel (the fuel solenoid valves open)
- Flame (the flame lights up)
- Driving to low flame (the actuator drives to low flame).
NOTE: the **C** and **A**, on the .
Once the ignition cycle ends, the main page is shown:

Setpoint	80°C
Act.value	78°C
Load	24%
Flame	60%

Main page

Set point: temperature set-point
Act value: actual temperature value
Load: load percentage (burner output)
Flame: percentage of flame detection current.
By pressing the ENTER key the display shows the second page:

Fuel	0.0	Air	1.8
Ax		VSD	0.0
Ax		O2	
Ax		Ld.	0.0

Second page

Fuel: it shows (in degrees) the fuel actuator position.
Air: it shows (in degrees) the air actuator position.
Ax1..3: auxiliaries.
VSD: % value on the inverter maximum frequency
O2: oxygen percentage
Ld: load percentage (burner output).

Press the ENTER key to go back to the main page.
To access the **main menu**, from the main page, press the ESC key tiwce:

OperationalStat
Operation
ManualOperation
Params & Display

Main menu

By pressing the ESC key once, the ***Operational Status*** (first item in the main menu) menu is directly shown:

Normal operation
Status/Reset
Fault History
Lockout History

the ***Operational Status*** menu provides the following items:
Normal operation: by selecting this item and pressing the ENTER key, the main page is showed; press ESC to go back to the main menu.
Status/Reset: it shows system errors or faults occuring / it represents the lockout reset function.
Fault History: by selecting this item and pressing the ENTER key, the Lockout History will be showed about the last 21 faults occured.
Lockout History: by selecting this item and pressing the ENTER key, the Lockout History will be showed about the last 9 lockouts occured, and the related date and hour.
Alarm act/deact: enable/disable the horn in case of alarm.

Fault History

To visualise the **Fault History**, select it and press the ENTER key. The message will be as:

1 Class:			05Gas
code	BF	Phase:	10
Diag.:	00	Lod:	0.0
Start No.			88

alternating by an error message as:

O2 control and
limiter automat
deactivated

To see the other Fault History pages, press the arrow keys.
To exit the Fault History pages, press ESC.

Lockout History

To visualise the **Lockout History**, choose the related item and press ENTER. The message will be:

1	10.08.07		13.47
C:71	D:00	F:	12
Start No.			88
Load	0.0		Gas

alternating by an error message as:

No flame at end
of safety time

To see the other Lockout History pages, press the arrow keys.
To exit the Lockout History pages, press ESC.

Setting the temperature/pressure set-point value

To set the temperature/pressure set-point value, that is the generator operating temperature/pressure; proceed as follows.

From the main page, enter the main menu by pressing the ESC key twice:

OperationalStat
Operation
ManualOperation
Params & Display

by means of the arrow keys, select “Params&Display”, press ENTER: the system will ask you to enter the proper password

Access w-out PW
Access Serv
Access OEM
Access LS

by means of the arrow keys, select “Access w-out pass” (access without password - user level), confirm by pressing ENTER.
The other levels require password reserved to the Technical Service, to the Manifacurer, etc.
The menu shown accessing without password is the following:

BurnerControl
RatioControl
O2Contr./Guard.
LoadController

Choose “LoadController” and press ENTER: the following menu is shown:

ControllerParam
Configuration
Adaption
SW Version

Choose “ControllerParam” and press ENTER: the following menu is shown:

ContrlParamList
MinActuatorStep
SW_FilterTmeCon
SetPointW1

Choose “**SetPointW1**” and press ENTER:

SetpointW1	
Curr:	90°
New:	90°

Curr: it shows the current set-point; use the arrows keys to change.

NOTE: the availabel range for this parameter depends on the probe provided; the unit measure of the detected value and its limits are bound up with parameters set at the “Service” level.

Once the new set-point is set, confirm by pressing ENTER, otherwise exit without changings by pressing ESC.

Press ESC to exit the set-point programming mode.

Once the temperature set-point W1 is imposed, set the Switch-on (SDon) and the Switch-off (SDoff) point of the 2-position controller:

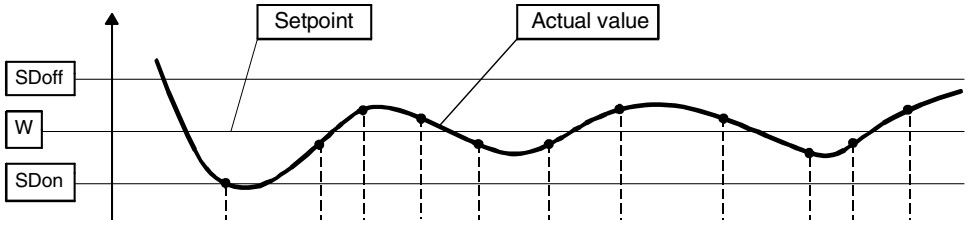

To set these values, select the item SD_ModOn (SDOn), by scrolling down the “Load controller” menu with the arrow keys and press ENTER:

SetpointW1
SetpointW2
SD_ModOn
SD_ModOff

the display will show:

SD_ModOn	
Curr::	1.0%
New:	1.0%

The deafult value for this parameter is1% that is, the burner will light again at a temperature 1% lower than the set-point. Change value,

if needed, by means of the arrow keys; press ENTER to confirm and the press ESC to exit. Press only ESC to exit without changing.
Now choose SD_ModOff always scrolling down theLoad Controller menu, by menas of the arrow keys, and press ENTER.

SetpointW1
SetpointW2
SD_ModOn
SD_ModOff

the display will show:

SD_ModOff	
Curr::	10.0%
New:	10.0%

The deafult value for this parameter is10% that is, the burner will turn off at a temperature 1% higher than the set-point.
Change value, if needed, by means of the arrow keys; press ENTER to confirm and the press ESC to exit. Press only ESC to exit without changing. Press the ESC key until the following menu is shown:

BurnerControl
RatioControl
O2Contr./Guard.
LoadController

scroll this menu down until the tiem “AZL” is reached

LoadController
AZL
Actuators
VSD Module

confirm by pressing ENTER:

Times
Languages
DateFormat
PhysicalUnits

Times: it sets the “Summer (SUM) Time / Winter (WIN) Time” operation and the continent (EU - Europe; US - United States)

Sum/Winter Time
Time EU/US

choose the Summertime/Wintertime mode desired and cofirm by pressing ENTER; press ESC to exit. Set the time zone (Time EU/US) in the same way.

Languages: it allows setting the current language

Language	
Curr::	Italiano
New:	English

choose the desired language and cofirm by pressing ENTER; press ESC to exit.

DateFormat: it allows setting the date format as DD-MM-YY (day-month-year) or MM-DD-YY (month-day-year)

DateFormat	
Curr::	DD-MM-YY
New:	MM-DD-YY

choose the desired format and cofirm by pressing ENTER; press ESC to exit.
PhysicalUnits: it allows setting the measuring units for temperature and pressure

UnitTemperature
UnitPressure

Settable temperature units: °C or °F
Settable pressure units: bar or psi.

- choose the desired unit and cofirm by pressing ENTER; press ESC to exit.
- choose the temperature and pressure unit and cofirm by pressing ENTER; press ESC to exit.

System lockout

If the system locks out, the following message will appear:

1	10.08.07		13.47
C:71	D:00	F:	12
Start No.			88
Load	0.0		Gas

call the Technical Service and tell the message data.

Cold start thermal shock (CSTP)

If the generator cannot suffer thermal shocks, the CSTP (Cold Start Thermal Schock) function can be enabled. This function is already set by the Technical service (access by reserved password).

if this function is enabled, when the burner starts upthe “Thermal shock protection activated” message will be showed.

If this function is not enabled, after startup, the burner will rapidly increase the load according to the requested value and, if necessary, to the maximum output.

Manual mode

To by-pass the thermal protection or not to let the buner operate in high flame stage (maximum output) after ignition, the manual mode is provided.

To choose the manual mode (Manual Operation), use the SELECT arrow keys

OperationalStat
Operation
ManualOperation
Params & Display

Items to be set are the following:

SetLoad
Autom/Manual/Off

SetLoad: to set the required load percentage

SetLoad	
Curr::	0.0%
New:	20.0%

set the required percentage and confirm by pressing ENTER; press ESC to exit.
choose “Autom/Manual/Off

SetLoad
Autom/Manual/Off

Autom/Manual/Off	
Curr::	Automatic
New:	Burner On

three modes are provided:
Automatic: automatic operation
Burner on: manual operation
Burner off: burner in stand-by
If the BurnerOn mode is choosen,the burner does not follow the modulator and probe settings, but operates at the set load.

Caution: if BurnerOff mode is selected, the burner stays in stand-by.
Caution: in the BurnerOn mode, the safety thresholds are set by the Technical Service.

For further details, see the LMV5x annexed manuals.

Adjustment procedure for light oil operation

The light oil flow rate can be adjusted choosing a by-pass nozzle that suits the boiler/utilisation output and setting the delivery and return pressure values according to the ones quoted on the below diagrams.

Adjustment procedure for light oil operation

The light oil flow rate can be adjusted choosing a by-pass nozzle that suits the boiler/utilisation output and setting the delivery and return pressure values according to the ones quoted on the table below and the diagram on Fig. 20 (as far as reading the pressure values, see next paragraphs).

FLUIDICS W2, WR2 NOZZLE: REFERENCE DIAGRAM (INDICATIVE ONLY)

	FLOW RATE kg/h	
DIMENSIONS	Min	Max
40	13	40
50	16	50
60	20	60
70	23	70
80	26	80
90	30	90
100	33	100
115	38	115
130	43	130
145	48	145
160	53	160
180	59	180
200	66	200
225	74	225
250	82	250
275	91	275
300	99	300
330	109	330
360	119	360
400	132	400
450	148	450
500	165	500
550	181	550
600	198	600
650	214	650
700	231	700
750	250	750
800	267	800

Tab. 1

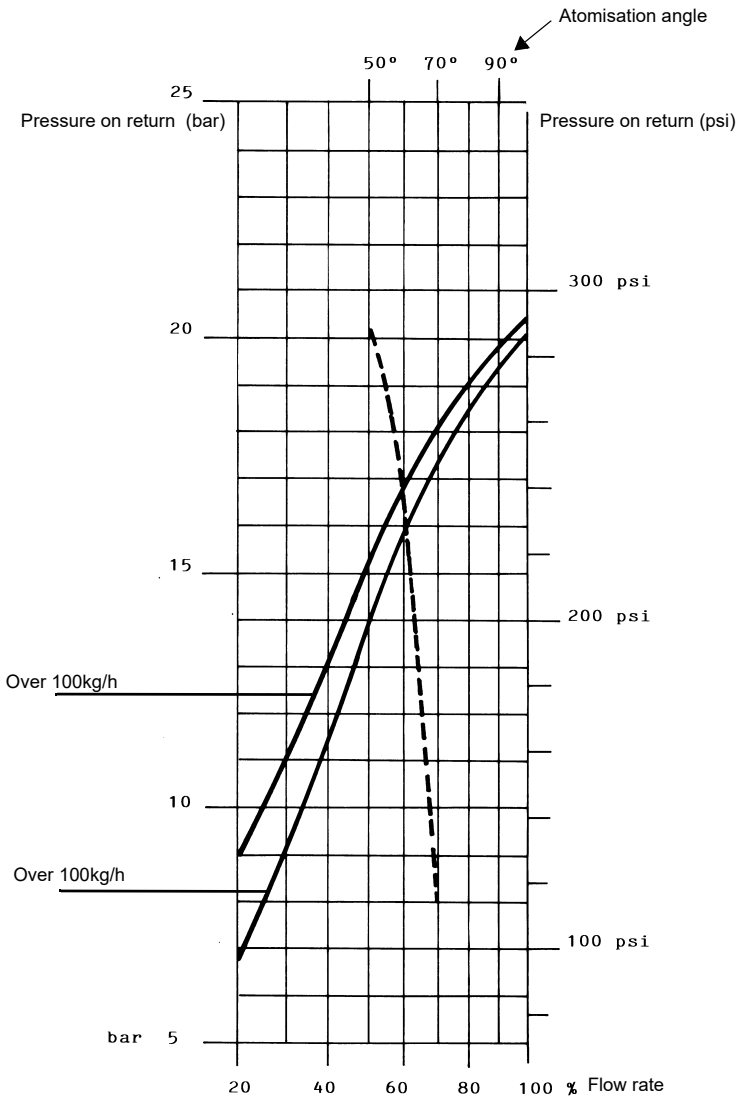

NOZZLE SUPPLY PRESSURE = 25 bar

- - - - - - - - - Atomisation angle according to the return pressure

_____ % Flow rate

ATTENTION! To achieve the maximum flow rate close completely the return line.

FLUIDICS KW3...60°

NOZZLE SUPPLY PRESSURE = 20 bar. VISCOSITY AT NOZZLE = 5 cSt

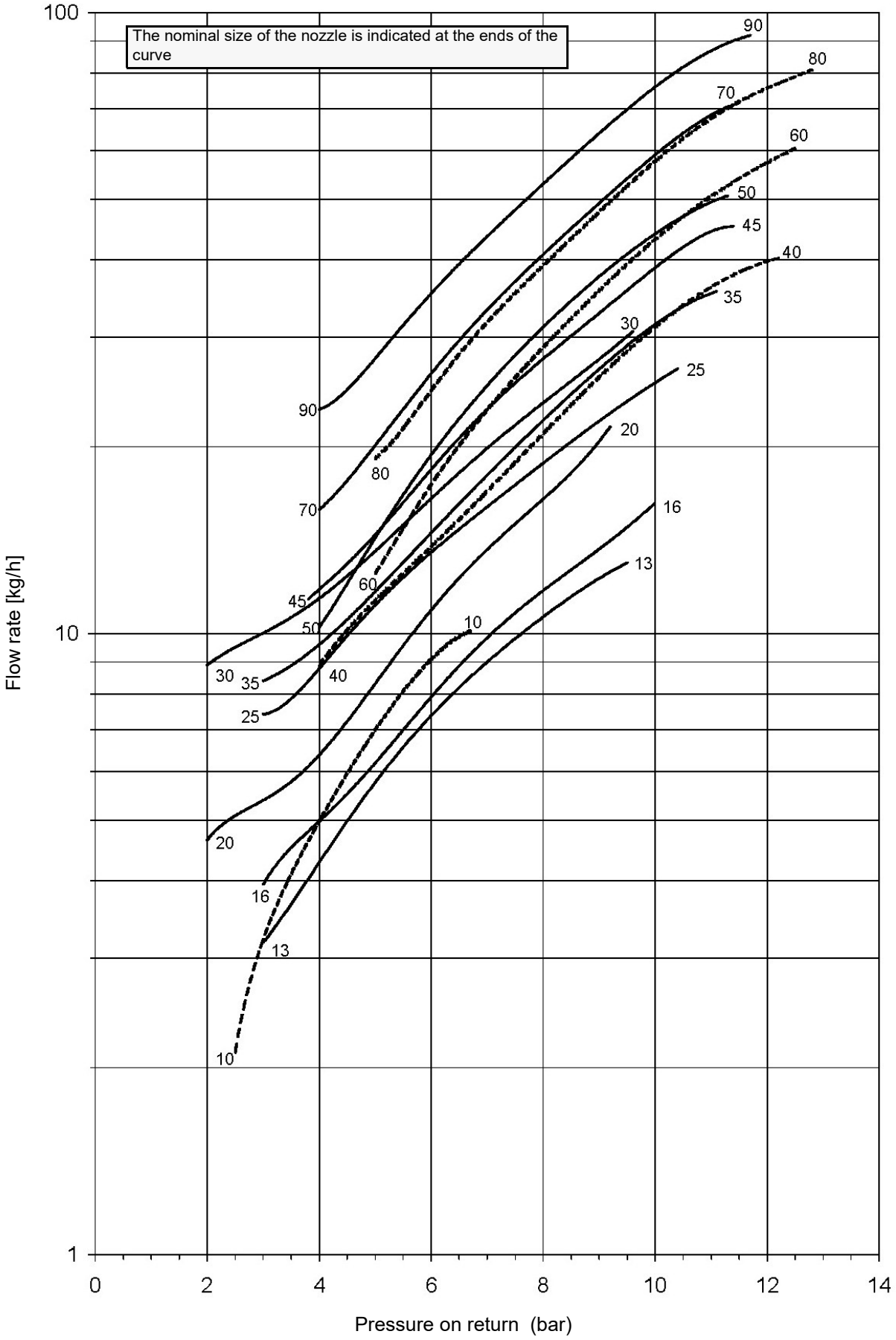

FLUIDICS KW3...60°

NOZZLE SUPPLY PRESSURE = 20 bar. VISCOSITY AT NOZZLE = 5 cS

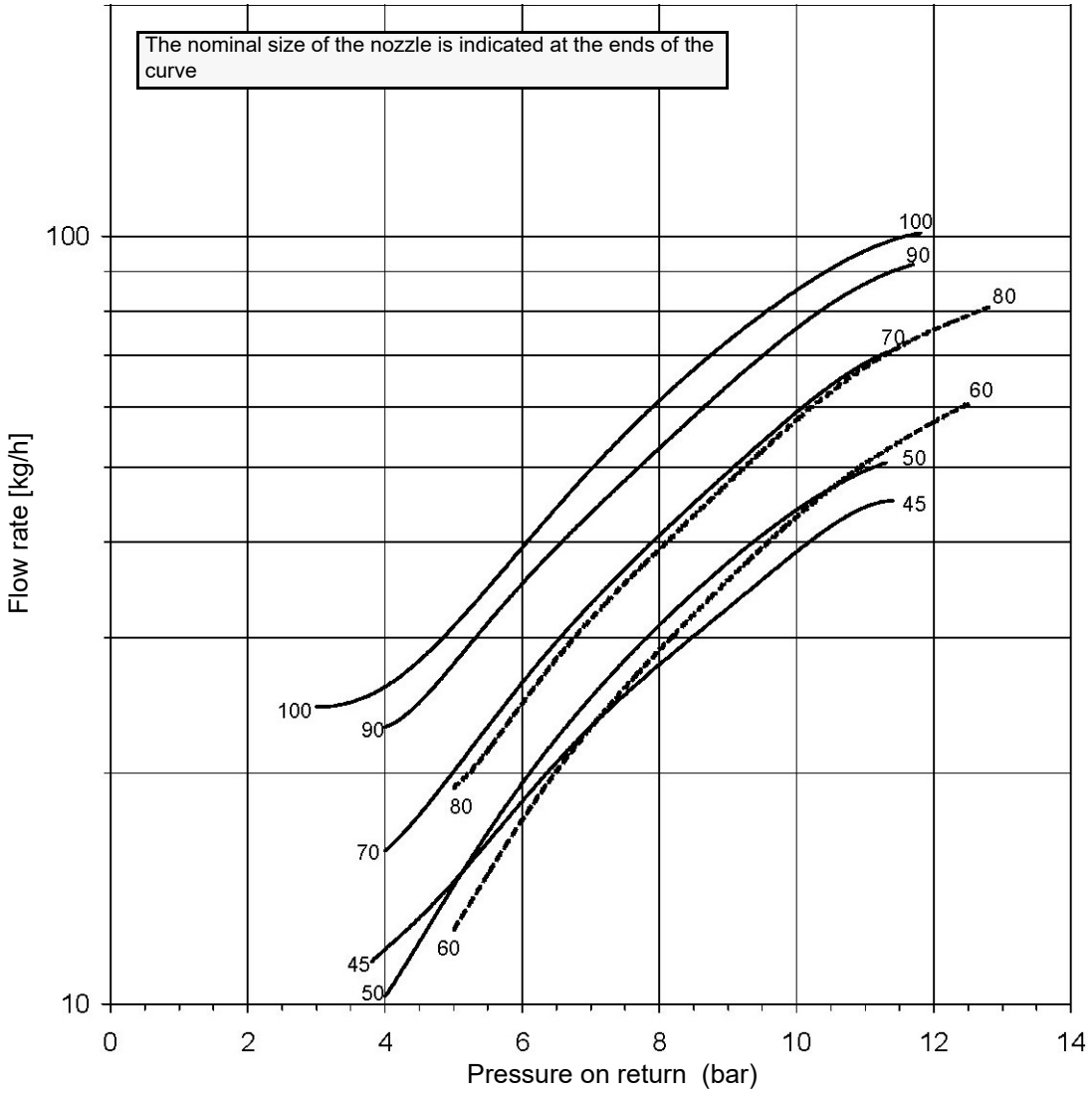

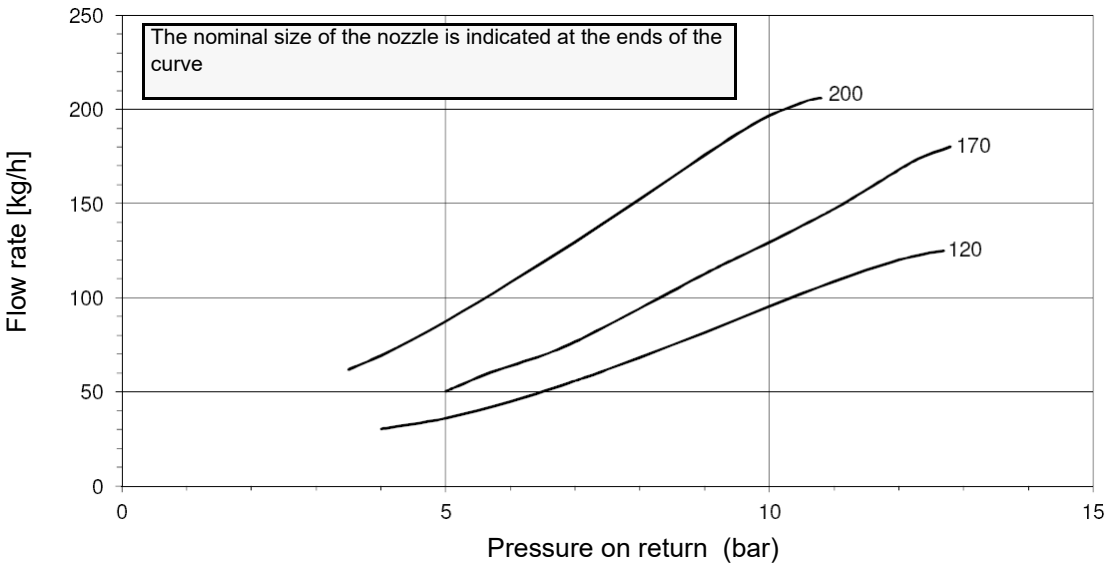

FLUIDICS KW3...60°

NOZZLE SUPPLY PRESSURE = 20 bar. VISCOSITY AT NOZZLE = 5 cSt

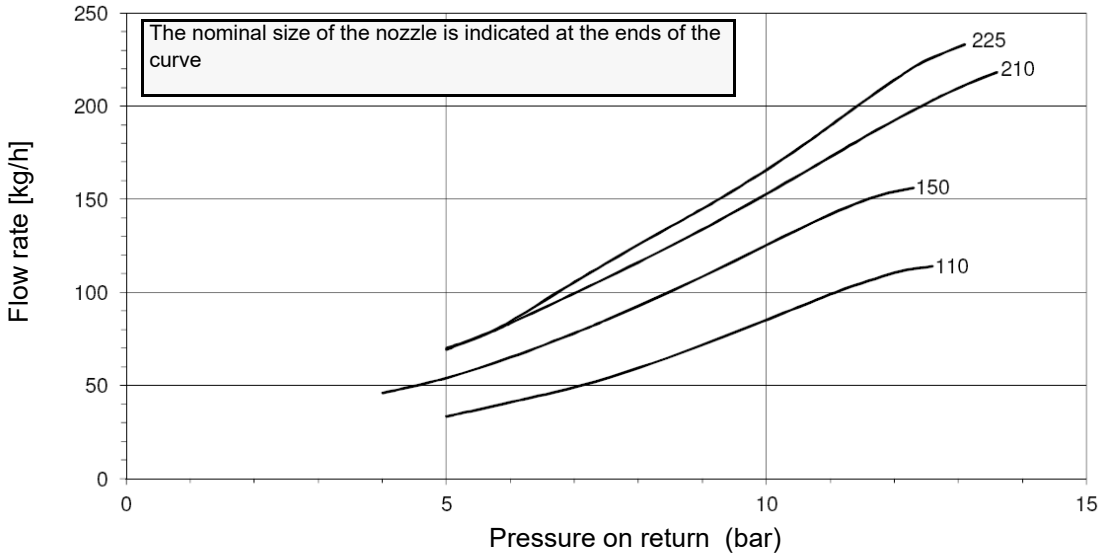

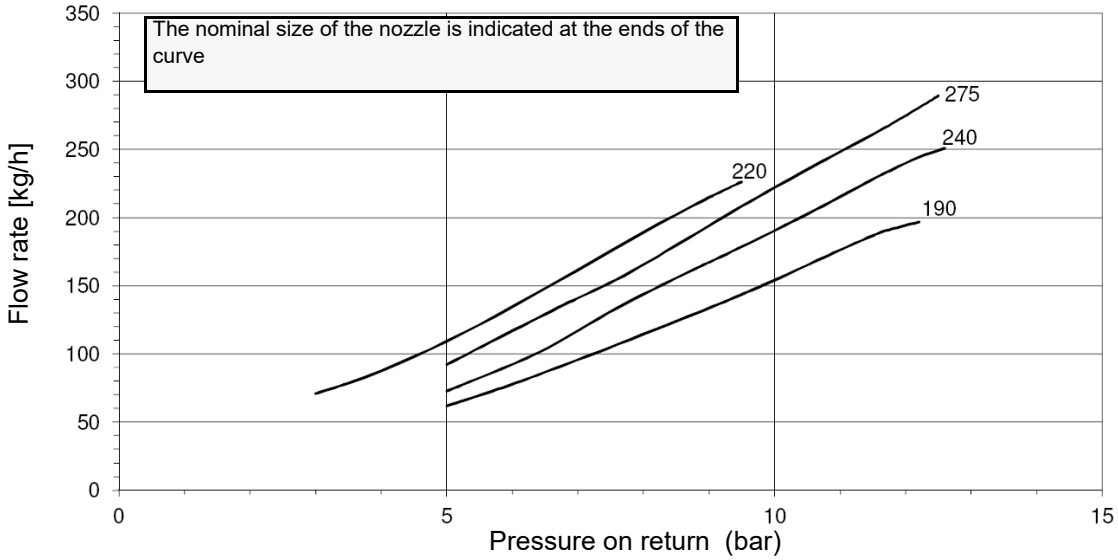

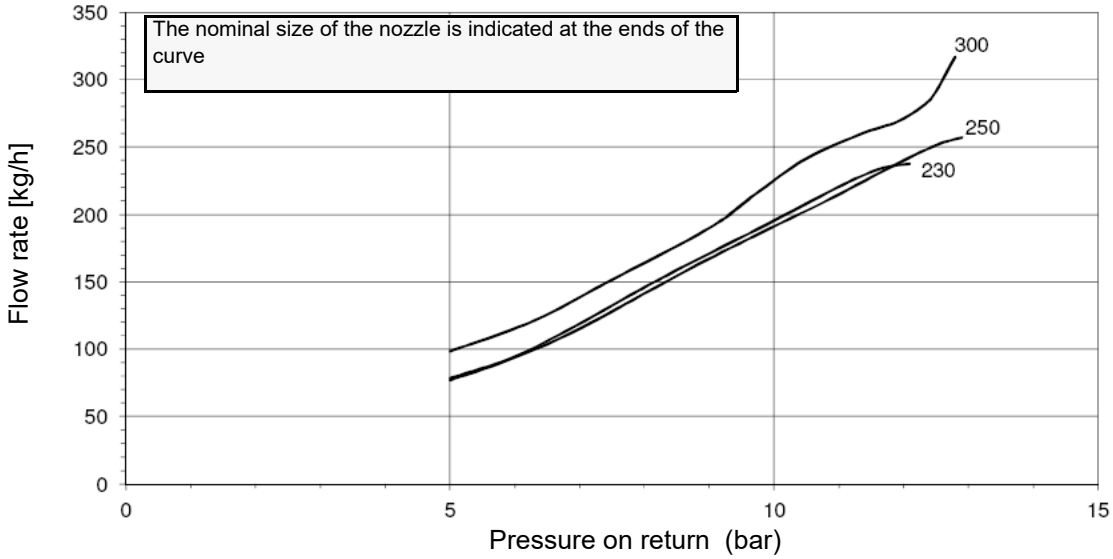

ADJUSTING THE GAS VALVES GROUP

Multibloc MB-DLE

The multibloc unit is a compact unit consisting of two valves, gas pressure switch, pressure stabilizer and gas filter.

The valve is adjusted by means of the **RP** regulator after slackening the locking screw **VB** by a number of turns. By unscrewing the regulator **RP** the valve opens, screwing the valve closes. To set the fast opening remove cover **T**, reverse it upside down and use it as a tool to rotate screw **VR**. Clockwise rotation reduces start flow rate, anticlockwise rotation increases it.

Do not use a screwdriver on the screw **VR**!

The pressure stabilizer is adjusted by operating the screw **VS** located under the cover **C**. By screwing down the pressure is increased and by unscrewing it is reduced.

Note: the screw **VSB** must be removed only in case of replacemente of the coil.

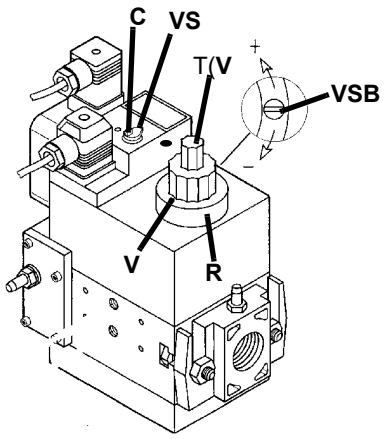

MultiBloc MBE *Regulation VD-R whith PS*

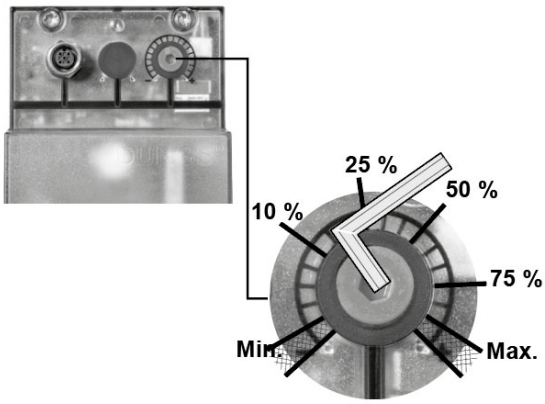

Outlet pressure	MIN	10%	25%	50%	75%	MAX
PS-10/40	4 mbar 0,4 kPa 2 "w.c.	10 mbar 1,0 kPa 4 "w.c.	25 mbar 2,5 kPa 10 "w.c.	50 mbar 5,0 kPa 20 "w.c.	75 mbar 7,5 kPa 30 "w.c.	100 mbar 10,0 kPa 40 "w.c.
PS-50/200	20 mbar 2,0 kPa 8 "w.c.	50 mbar 5,0 kPa 20 "w.c.	125 mbar 12,5 kPa 50 "w.c.	250 mbar 25,0 kPa 100 "w.c.	375 mbar 37,5 kPa 150 "w.c.	500 mbar 50,0 kPa 200 "w.c.

Caution: check that the range of the installed spring is compatible with the gas pressure at the burner head (see appropriate diagram) to which must be added the back pressure and approx. 5 /10 mbar for various leaks and gas line.

While making outlet pressure adjustments, do not exceed a value that creates a hazardous condition to the burner!

Siemens VGD../VRD.. version with SKP2

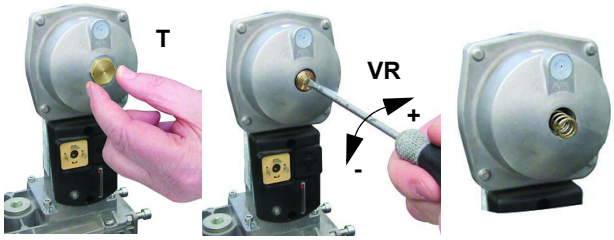

Performance range (mbar)			
	neutral	**yellow**	**red**
Spring colour SKP 25.0	0 ÷ 22	15 ÷ 120	100 ÷ 250
Spring colour SKP 25.4		7 ÷ 700	150 ÷ 1500

The pressure adjusting range, upstream the gas valves group, changes according to the spring provided with the valve group.

To replace the spring supplied with the valve group, proceed as follows:i

To increase or decrease gas pressure, and therefore gas flow rate, remove the cap **T** and use a screwdriver to adjust the regulating screw **VR**. Turn clockwise to increase the flow rate, counterclockwise to reduce it.

Calibration air and gas pressure switches

The **air pressure switch** locks the control box if the air pressure is not the one requested. If it happens, unlock the burner by means of the control box unlock pushbutton, placed on the burner control panel.

The **gas pressure switches** check the pressure to avoid the burner operate when the pressure value is not in the requested pressure range.

Calibration of low gas pressure switch

With the burner operating at maximum power, increase the regulation pressure by slowly turning the control knob clockwise until the burner stops, taking care it does not go into lockout and the display shows the error "**Err c20 d0**".

As for the gas pressure switch calibration, proceed as follows:

- Be sure that the filter is clean.
- Remove the transparent plastic cap.
- While the burner is operating at the maximum output, test the gas pressure on the pressure port of the minimum gas pressure switch.
- Slowly close the manual cutoff valve (placed upstream the pressure switch, see gas train installation diagram), until the detected pressure is reduced by 50%. Pay attention that the CO value in the flue gas does not increase: if the CO values are higher than the limits laid down by law, slowly open the cutoff valve as to get values lower than these limits.
- Check that the burner is operating correctly.
- Clockwise turn the pressure switch adjusting ring nut (as to increase the pressure value) until the burner stops.
- Slowly fully open the manual cutoff valve.
- Refit the transparent plastic cover on the pressure switch.

Calibration the maximum gas pressure switch (when provided)

To calibrate the maximum pressure switch, proceed as follows according to its mounting position:

- remove the pressure switch plastic cover;
- if the maximum pressure switch is mounted upstreaam the gas valves: measure the gas pressure in the network, when flame is off; by means of the adjusting ring nut **VR**, set the value read, increased by the 30%.
- if the maximum pressure switch is mounted downstream the “gas governor-gas valves” group and upstream the butterfly valve: light the burner, adjust it according to the procedure in the previous paragrph. Then, measure the gas pressure at the operating flow rate, downstream the “gas governor-gas valves” group and upstream the butterfly valve; by means of the adjusting ring nut **VR**, set the value read on step 2, increased by the 30%;
- replace the plastic cover.

Calibration of air pressure switch

To calibrate the air pressure switch, proceed as follows:

- Remove the transparent plastic cap.
- Once air and fuel setting have been accomplished, startup the burner.
- During the pre-purge phase o the operation, turn slowly the adjusting ring nut **VR** in the clockwise direction (to increase the adjusting pressure) until the burner lockout, then read the value on the pressure switch scale and set it to a value reduced by 15%.
- Repeat the ignition cycle of the burner and check it runs properly.
- Refit the transparent plastic cover on the pressure switch.

Calibration gas leakage pressure switch (PGCP)

- remove the pressure switch plastic cover;
- adjust the PGCP pressure switch to the same value set for the minimum gas pressure switch;
- replace the plastic cover.

HEAD ADJUSTING

Regulating the combustion head

The burner is factory-adjusted with the combustion head in the "MAX" position, accordingly to the maximum power. To operate the burner at a lower power, progressively shift back the combustion head, towards the "MIN" position, screwing the screw **VRT**. The ID index shows how much the combustion head moved.

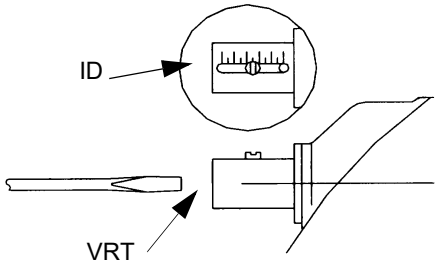

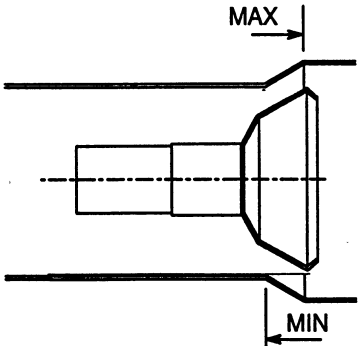

Attention! if it is necessary to change the head position, repeat the air and fuel adjustments described above.

PART IV: MAINTENANCE

At least once a year carry out the maintenance operations listed below. In the case of seasonal servicing, it is recommended to carry out the maintenance at the end of each heating season; in the case of continuous operation the maintenance is carried out every 6 months.

WARNING: ALL OPERATIONS ON THE BURNER MUST BE CARRIED OUT WITH THE MAINS DISCONNECTED AND THE FUEL MANAUL CUTOFF VALVES CLOSED!
ATTENTION: READ CAREFULLY THE "WARNINGS" CHAPTER AT THE BEGINNIG OF THIS MANUAL.

ROUTINE MAINTENANCE

- Check that the gas meter is not moving when the burner is off. In case it is rotating, look for possible leaks.
- Check the cleaning condition of the vent. Clean the vent by using exclusively a dry brush. If needed, disassemble it from the motor's shaft and wash it by using non corrosive detergents. Prior to disassemble the vent, take the measurements in relation to the motor's shaft, so as to reassemble it in the same position.
- Check that all parts in contact with combustive air (air box, protection mesh and Archimedean screw) are clean and free from any obstruction that might impede free afflux. Clean it with compressed air if available and/or a dry brush or cloths. Eventually wash it with non corrosive detergents.
- Check the blast tube; it must be substituted in case of obvious cracks or anomalous holes. Slight deformations that do not affect combustion may be tolerated
- Check the condition of the burner-boiler gasket. Eventually substitute it.
- Check the fan's motor: no specific maintenance is needed. In case of anomalous noises when running, check the condition of the bearings and eventually substitute them or completely substitute the motor.
- Clean and examine the gas filter cartridge and replace it if necesssary;
- Remove and clean the combustion head;
- Examine and clean the ignition electrodes, adjust and replace them if necessary;
- Examine and clean the detection electrode/photoelement (according to the burner models), replace it if necessary, in case of doubt, check the detection circuit, after the burner start-up;
- Clean and grease leverages and rotating parts.
-

ATTENTION: when servicing, if it was necessary to disassemble the gas train parts, remember to execute the gas proving test, once the gas train is reassembled, according to the procedure imposed by the law in force.

-
- At least every 2 months, or more often if needed, clean the room where the burner is installed.Avoid leaving installations, papers, nylon bags, etc., inside the room. They could be sucked by the burner and cause malfunctioning.
- Check that the room's vents are free from obstructions.

Gas filter maintenance

WARNING: Before opening the filter, close the manual cutoff valve downstream the filter and bleed the gas; check that inside the filter there is no pressurised gas.

Per pulire o sostituire il filtro gas procedere nel modo seguente:

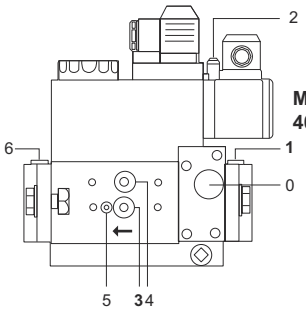

MB-DLE
405..412

0 Filter cover
1, 3,4 , 6 Screw plug G 1/8
2 Meter connection
5 Screw plug M14

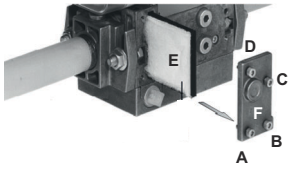

Pressure taps

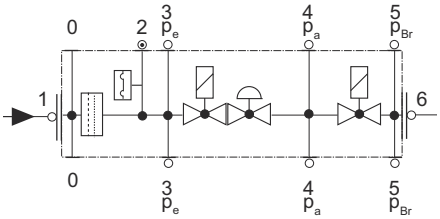

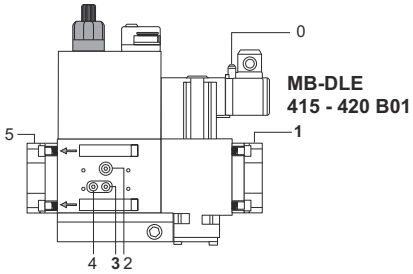

MB-DLE
415 - 420 B01

0, 1, 2, 3, 4, 5
Bouchon à vis G 1/8

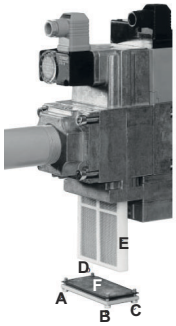

Pressure taps

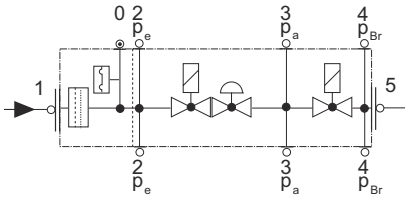

- Check the filter at least once a year!
- Change the filter if the pressure difference between pressure connection 1 and 3 (Fig. 1-Fig. 3)is $\Delta p > 10$ mbar.
- Change the filter if the pressure difference between pressure connection 1 and 3 (Fig. 1-Fig. 3) is twice as high compared to the last check.

You can change the filter without removing the fitting.

1 Interrupt the gas supply closing the on-off valve.
2 Remove screws 1 ÷ 4 using the Allen key n. 3 and remove filter cover 5 in Fig. 5.
3 Remove the filter 6 and replace with a new one.
4 Replace filter cover 5 and tighten screws 1 ÷ 4 without using any force and fasten.
5 Perform leakage and functional test, $p_{max.}$ = 360 mbar.

To clean or remove the filter, proceed as follows:

1 remove the cap unscrewing the fixing screws (A);
2 remove the filtering cartridge (B), clean it using water and soap, blow it with compressed air(or replace it, if necessary)
3 replace the cartridge in its proper position taking care to place it inbetween the guides as not to hamper the cap replacement;

be sure to replace the “O” ring into its place (C) and replace the cover fastening by the proper screws (A).

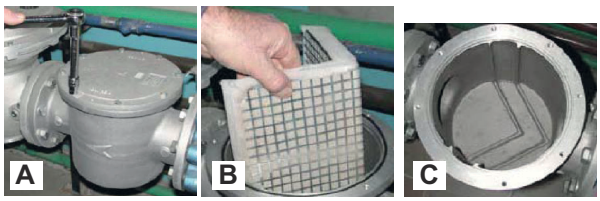

MultiBloc VD-V VD-R Mounting

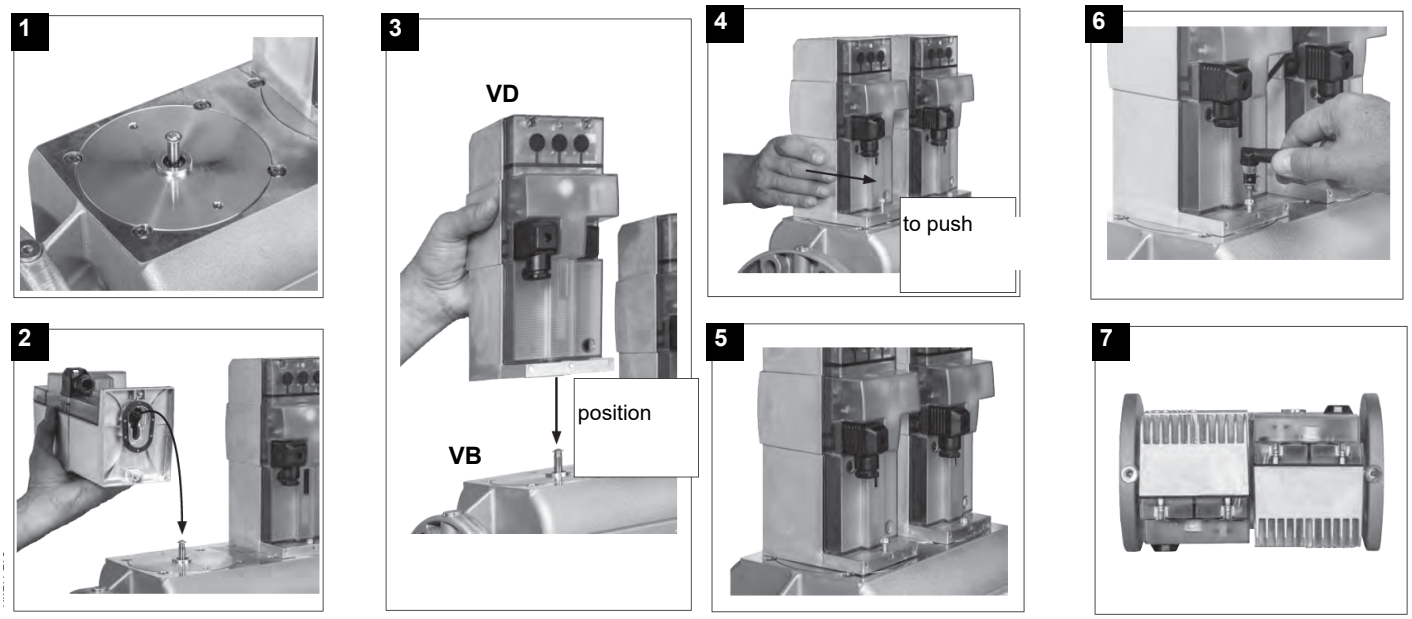

1. Position VD on VB, fig. 2+3.
2. Slide VD forward up to the stop, fig. 4.
3. Screw VD on with 2 M5 screws for each, max. 5 Nm/44 in.-lb., fig. 5/6.
4. VD can be mounted rotated by 180°, fig. 7.

Siemens SKP15 e SKP25 Mounting

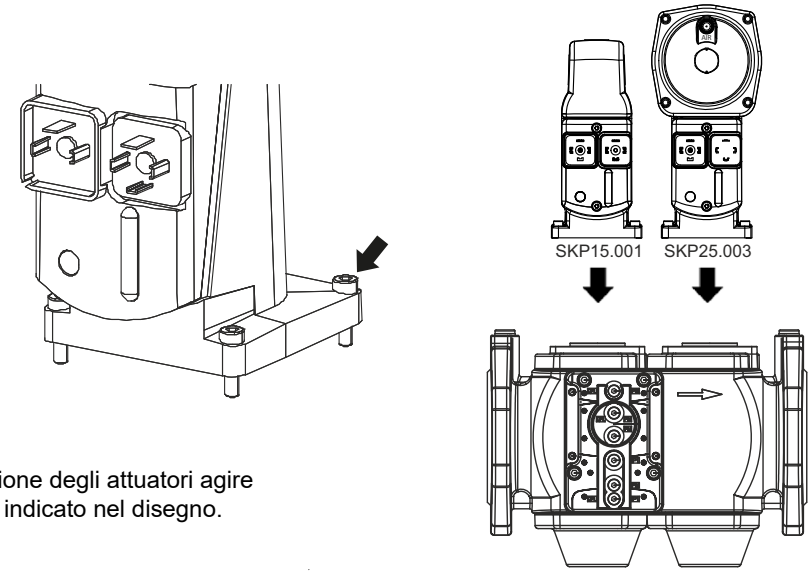

Per la sostituzione degli attuatori agire sulle viti come indicato nel disegno.

Thecnical procedure of self cleaning filters substitution (valid for all models)

1 Close the bowl valve before the self cleaning filter
2 Switch off any electrical equipment on board on the filter (example motorization or heaters)

WARNING! Drain the system by unscrewing the drain screw on the bottom of the self cleaning filter

3 Disconnect the outlet pipe from the cover of the self cleaning filter
4 Remove the cover with all the filter pack, leaving only the bowl on the line
5 Clean any residue on the bottom of the bowl and clean the seat of the O-ring seal

WARNING! Replace the O-ring seal between the bowl and cover

6 Insert the filter pack again making sure to respect the correct inlet/outlet direction or any references on the cover and tray
7 Replace the filter by following the reverse order operations
8 Make sure there is no leakage and give the power to any electrical equipmente on the filter

Removing the combustion head

1 Remove the top **H**.
2 Remove the **UV** detector out of its housing: disconnect electrode cables and the light oil flexible hoses.
3 Loosen the screws **V** holding the gas manifold **G**, loosen the connectors **E**.
4 Some models are provided with the **T** baffle. Move the gas manifold ahead and remove the baffle.
5 Pull out the complete group as shown in the picture below.
6 Clean the combustion head by means of a vacuum cleaner; scrape off the scale by means of a metallic brush.

Note: to replace the combustion head, reverse the operations described above.

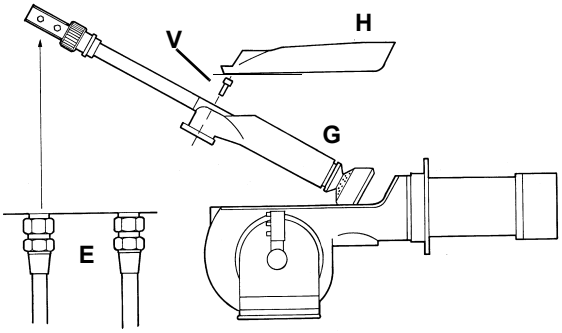

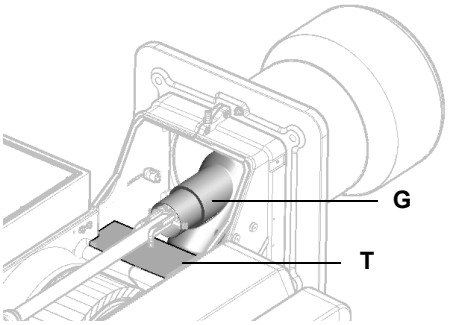

Electrodes Adjustment

Adjust the electrodes position, according to the quotes shown othe next picture

ATTENTION: avoid the ignition and detection electrodes to contact metallic parts (blast tube, head, etc.), otherwise the boiler's operation would be compromised. Check the electrodes position after any intervention on the combustion head.

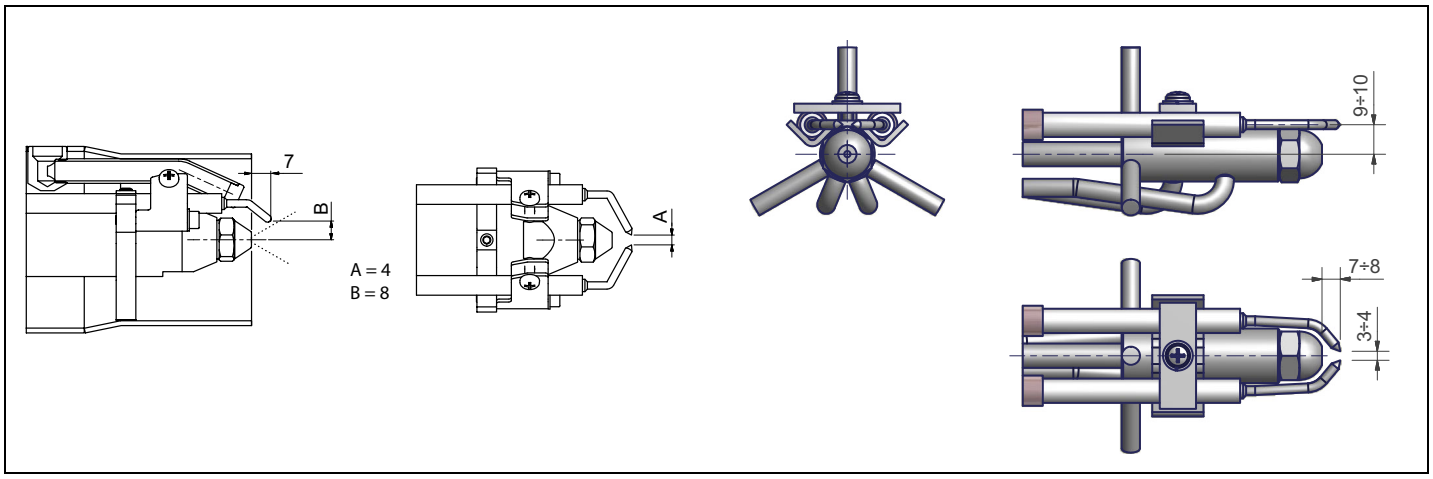

Replacing the ignition electrodes

ATTENTION: avoid the ignition and detection electrodes to contact metallic parts (blast tube, head, etc.), otherwise the boiler's operation would be compromised. Check the electrodes position after any intervention on the combustion head.

To replace the ignition electrodes, proceed as follows:

1 remove the burner cover;
2 loose the nuts that fasten the electrodes group to the combustion head (A);
3 disconnect the electrodes cables (B);
4 loose the security dowes of the adjusting ring nut (C);
5 shift the electrodes group back to the outside and remove the combustion head (D);
6 loose the screw of th eignition electrodes support (E);
7 remove the electrodes and replace them paying attention to the measures showed in figure (F-G);
8 reassemble the burner by fllowing the procedure in the reversed order.

electrodes - type A

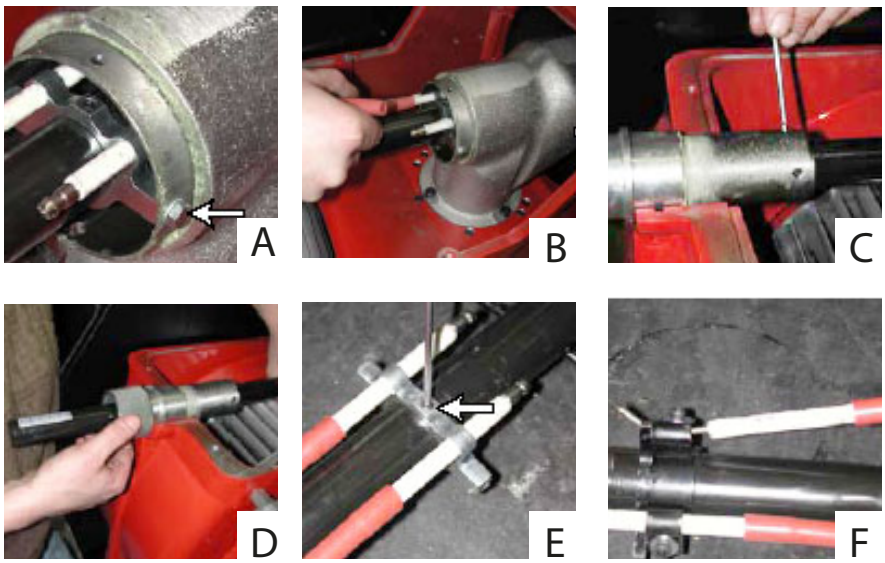

Cleaning/replacing the electrodes

ATTENTION: avoid the electrodes to get in touch with metallic parts (blast tube, head, etc.), otherwise the boiler operation would be compromised. Check the electrodes position after any intervention on the combustion head.

To remove the oil gun, proceed as follows:

1 remove the combustion head as described on the prevoius paragraph;
2 loosen the **VL** screw and remove the oil gun and the electrodes: check the oil gun, replace it if necessary;
3 after removing the oil gun, unscrew the nozzle and replace it if necessary;
4 in order to replace the electrodes, unscrew the **VE** fixing screws and remove them: place the new electrodes being careful to observe the measures showed on pag.: reassemlbe following the reversed procedure.

Caution: adjust the nozzle position according to the air pipe, by means of the **VU** screw, ance the **VL** screw is fastened.

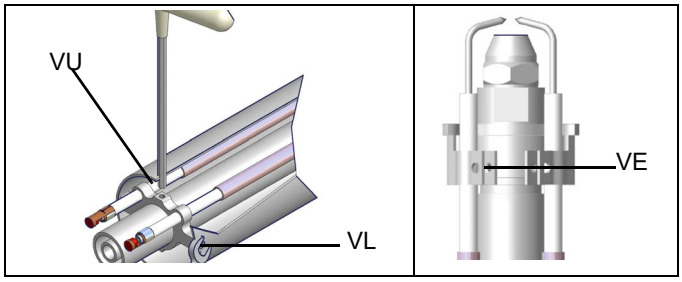

Checking the detection current

To check the detection signal follow the scheme in the picture below. If the signal is less than the value indicated, check the position of the detection electrode or detector, the electrical contacts and, if necessary, replace the electrode or the detector.

Device	Flame detector	Minimum detection signal
Siemens LMV2x/3x	QRA	70 µA (intensity of flame >24%)

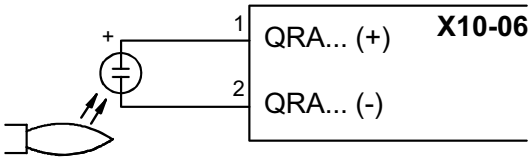

Burner service term

- In optimal operating conditions, and with preventive maintenance, the burner can last up to 20 years.
- Upon expiry of the burner service term, it is necessary to carry out a technical diagnosis and, if necessary, an overall repair.
- The burner status is considered to be at its limit if it is technically impossible to continue using it due to non-compliance with safety requirements or a decrease in performance.
- The owner makes the decision whether to finish using the burner, or replacing and disposing of it based on the actual state of the appliance and any repair costs.
- The use of the burner for other purposes after the expiry of the terms of use is strictly prohibited.

Seasonal stop

To stop the burner in the seasonal stop, proceed as follows:

1 turn the burner main switch to 0 (Off position)
2 disconnect the power mains
3 close the fuel valve of the supply line

Burner disposal

In case of disposal, follow the instructions according to the laws in force in your country about the “Disposal of materials”.

WIRING DIAGRAMS

Refer to the attached wiring diagrams.

WARNING

1 - Electrical supply 230V / 400V 50Hz 3N a.c.
2 - Do not reverse phase with neutral
3 - Ensure burner is properly earthed

TROUBLESHOOTING GUIDE Gas operation

BURNER DOESN'T LIGHT	* No electric power supply	* Restore power supply
	* Main switch open	* Close switch
	* Thermostats open	* Check set points and thermostat connections
	* Bad thermostat set point or broken thermostat	* Reset or replace the thermostat
	* No gas pressure	* Restore gas pressure
	* Safety devices (manually operated safety thermostat, pressure switches and so on) open	* Restore safety devices; wait till boiler reaches operating temperature then check safety device functionality.
	* Broken fuses	* Replace fuses. Check current absorption
	* Fan thermal contacts open (three phases motors only)	* Reset contacts and check current absorption
	* Burner control lock out	* Reset and check its functionality
	* Burner control damaged	* Replace burner control
GAS LEAKAGE: BURNER LOCKS OUT (NO FLAME)	* Gas flow is too low	* Increase the gas flow * Check gas filter cleanness * Check butterfly valve opening when burner is starting (only Hi-Low flame and progressive)
	* Ignition electrodes discharge to ground because dirty or broken	* Clean or replace electrodes
	* Bad electrodes setting	* Check electrodes position referring to instruction manual
	* Electrical ignition cables damaged	* Replace cables
	* Bad position of cables in the ignition transformer or into the electrodes	* Improve the installation
	* Ignition transformer damaged	* Replace the transformer
BURNER LOCKS OUT WITH FLAME PRESENCE	* Wrong setting of flame detector	* Adjust flame detector
	* Flame detector damaged	* Replace flame detector
	* Bad cables of flame detector	* Check cables
	* Burner control damaged	* Replace burner control
	* Phase and neutral inverted	* Adjust connections
	* Ground missing or damaged	* Check ground continuity
	* Voltage on neutral	* Take off tension on neutral
	* Too small flame (due to not much gas)	* Adjust gas flow * Check gas filter cleanness
	* Too much combustion air	* Adjust air flow rate
only FOR LME22: BURNER CONTINUES TO PERFORM ALL ITS FEATURES WITHOUT IGNITING THE BURNER	* Air pressure switch damaged or bad links	* Check air pressure switch functions and links
	* Burner control damaged	* Replace burner control
BURNER LOCKS OUT WITHOUT ANY GAS FLOW	* Gas valves don't open	* Check voltage on valves; if necessary replace valve or the burner control * Check if the gas pressure is so high that the valve cannot open
	* Gas valves completely closed	* Open valves
	* Pressure governor too closed	* Adjust the pressure governor
	* Butterfly valve closed	* Open the butterfly valve
	* Maximum pressure switch open.	* Check connection and functionality
	* Air pressure switch doesn't close the NO contact	* Check connections * Check pressure switch functionality
THE BURNER IS BLOCKED AND THE EQUIPMENT PROVIDES A LOCK CODE "CAUSE AIR PRESSURE SWITCH FAULT"	* Air pressure switch damaged (it keeps the stand-by position or badly set)	* Check air pressure switch functionality * Reset air pressure switch
	* Air pressure switch connections wrong	* Check connections
	* Air fan damaged	* Replace motor
	* No power supply	* Reset power supply
	* Air damper too closed	* Adjust air damper position
BURNER LOCKS OUT DURING NORMAL RUNNING	* Flame detector circuit interrupted	* Check wiring * Check photocell
	* Burner control damaged	* Replace burner control
	* Maximum gas pressure switch damaged or badly set	* Reset pressure switch or replace it
THE BURNER STARTS AND AFTER A WHILE IT REPEATS THE STARTING CYCLE.	* Gas pressure switch badly set	* Reset the pressure switch
	* Gas filter dirty	* Clean gas filter
	* Gas governor too low or damaged	* Reset or replace the governor
BURNER STANDS WHILE RUNNING WITHOUT ANY SWITCHING OF THERMOSTATS	* Thermal contacts of fan motor open	* Reset contacts and check values * Check current absorption
FAN MOTOR DOESN'T START	* Internal motor wiring broken	* Replace wiring or complete motor
	* Fan motor starter broken	* Replace starter
	* Fuses broken (three phases only)	* Replace fuses and check current absorption
BURNER DOESN'T SWITCH TO HIGH FLAME	* Hi-low flame thermostat badly set or damaged	* Reset or replace thermostat
	* Servomotor cam badly set	* Reset servomotor cam
***mechanical only*: SOMETIMES THE SERVOMOTOR RUNS IN THE WRONG WAY**	* Servomotor capacitor damaged	* Replace capacitor
PHASE-TO-PHASE SUPPLY OR PRESENCE OF VOLTAGE ON NEUTRAL*	* Lights up and freezes	* In such cases, insert an RC circuit (our code 2531003).

TROUBLESHOOTNG GUIDE Light oil operation

BURNER DOESN'T LIGHT	* No electric power supply	* Wait for electric power supply is back
	* Main switch open	* Close the switch
	* Thermostats open	* Check set points and thermostat connections
	* Bad thermostat set point or broken thermostat	* Set or replace the thermostat
	* No gas pressure	* Restore gas pressure
	* Safety devices (manually operated safety thermostat or pressure switch, and so on ...) open	* Restore safety devices; wait that boiler reaches its temperature then check safety device functionality.
	* Broken fuses	* Replace fuses. Check current absorption
	* Fan thermal contacts open (only three phases)	* Reset contacts and check current absorption
	* Burner control locked out	* Reset and check its functionality
	* Burner control damaged	* Replace burner control
BURNER LOCKS OUT WITH FLAME PRESENCE	* Flame detector dirty or damaged	* Clean or replace flame detector
	* Burner control damaged	* Replace burner control
	* Smoking flame	* Reset combustion air flow rate * Check the nozzle and, if necessary, replace it * Check cleanness of combustion head * Check chimney suction * Check boiler cleanness
	* Combustion head dirty	* Clean combustion head
BURNER LOCKS OUT WITHOUT ANY FUEL FLOW RATE	* No fuel	* Fill the tank
	* Pump joint broken	* Check pump pressure
	* Pump damaged	* Check pump suction
		* Replace pump
	* Compressed air (or steam) too high	* Released compressed air (or steam) pressure
	* Oil metering valve not open far enough	* Check air pressure
		* Check servomotor position
	* Oil valve not energized	* Check wiring path or replace valve
	* Fan motor not efficient	* Adjust or replace the motor
	* Fan or pump motor runs in the wrong way	* Change rotation
	* Obstructed nozzle	* Clean or replace the nozzle
	* Check valve in the tank locked or leaking	* Clean or replace the valve
	* Oil filter dirty * Pump filter dirty	* Clean filter
	* Solenoid valve dirty or broken	* Clean or replace solenoid valve
BURNER LOCKS OUT WITH FUEL FLOW RATE (NO FLAME)	* Oil pressure too low	* Reset oil pressure
	* Nozzle dirty or damaged	* Clean or replace nozzle
	* Water in the tank	* Take off all the water from the tank
		* Clean all filters
	* Suction too high	* Check suction before pump. If necessary clean filters.
	* Ignition electrodes grounded because dirty or damaged	* Clean or replace electrodes
	* Ignition electrodes badly set	* Check electrodes position referring to instruction manual
	* Cables damaged	* Replace cables
	* Bad position of cables in the ignition transformer or into the electrodes	* Improve the installation
	* Ignition transformer damaged	* Replace the transformer
PUMP TOO NOISY	* Suction too high (over 0,35 bar) (dirty filters, check valve in the tank locked, and so on ...)	* Clean filters * Replace check valve in the tank
	* Flexible hoses damaged	* Replace flexible hoses
	* Air infiltration in the pipes	* Take off all infiltration
	* Pipe too long or too narrow	* Increase line size
BURNER RUMBLES WHEN MODULA-TING TO HIGH FIRE	* Burner is too lean	* Adjust air-oil ratio
	* Drawer assembly not set properly	* Check drawer position
	* Oil may be too hot	* Check oil temperature
	* Flame is blowing off head	* Check head position
CARBON BUILD-UP ON THE FIRESIDES OF THE BOILER	* Oil flame not retaining to head	
	* Dirty nozzle	* Clean the nozzle
	* Oil spray impinging on burner head	* Check position of the nozzle respect to the head
	* Spray angle of the nozzle too wide	* Reduce spray angle
FLAME IRREGULAR OR SPARKING	* Oil pressure at nozzle too low	* Reset oil pressure
	* Air flow rate too high	* Adjust air flow rate
	* Oil is too cold	* Adjust oil temperature
	* Dirt in the oil	* Check filters
	* Water in the fuel	* Take off all the water
	* Oil impingement on the combustion head	* Drawer assembly far too rear * Nozzle is not protruding through centerhole of air diffuser * Oil flame not retaining to the head
	* Nozzle dirty or damaged	* Clean or, if necessary, replace the nozzle
BURNER LIGHTS BUT FLAME DOESN'T RETAIN TO BURNER HEAD	* Drawer assembly not positioned correctly	* Move forward or backward
	* Nozzle too far forward through centerhole of diffuser	* Move nozzle backward respect to diffuser
	* Oil or air pressure at nozzle is too low	* Increase oil or air pressure
	* Air louver too open	* Reduce air louver opening
	* Too much spread between oil and air (or steam) pressure	* Set the spread to a proper value
FLAME IRREGULAR OR SMOKING	* Not enough combustion air	* Adjust air flow rate
	* Nozzle dirty or damaged	* Clean or, if necessary, replace the nozzle
	* Flame is too big for furnace or nozzle spray angle is wrong	* Check burner-furnace coupling * Change nozzle with a suitable one
	* Nozzle spray angle wrong (flame too long or too wide)	* Replace nozzle
	* Boiler dirty	* Clean the boiler
	* Not enough suction at chimney	* Check chimney cleanness or size
	* Pressure at nozzle too low	* Reset oil pressure
	* Oil too cold	* Reset oil temperature
	* Combustion air inlet dirty	* Clean the air inlet
	* Flame is too small respect to furnace volume	* Replace nozzle or reset pump pressure
FUEL GAS TEMPERATURE TOO HIGH	* Boiler dirty	* Clean the boiler
	* Oil flow rate too high	* Adjust oil pressure or replace nozzle

C.I.B. UNIGAS S.p.A.
Via L.Galvani, 9 - 35011 Campodarsego (PD) - ITALY
Tel. +39 049 9200944 - Fax +39 049 9200945/9201269
web site: www.cibunigas.it - e-mail: cibunigas@cibunigas.it

Note: specifications and data subject to change. Errors and omissions excepted.

RECOMMENDATIONS FOR LMV5x CONNECTIONS

Connections affected by EMC noises are related to the bus cable (actuator line cable, PLL52), detection probe cable, speed sensor cable, 4-20mA signal cable that controls the VSD.

Input and power cables (400V e 230V) must be laid separately from the signal cables.

The bus cable between control panel and burner and between burner and PLL52 board (used when O2 trim control must be perfomed) must be laid separately and far from power cables.
When long cables must be provided, it is recommended to put the bus cable into a pipe or a metallic sheath: the sheath ends must be grounded with suitable rings.

Provide a shielded three-pole cable type FG7OH2R+T (see Annex 1), between VSD and motor; earth must be outside the shielding.

Shielding must get to the lower part of the VSD and get to the motor junction box.
Shielding must be connected to the equipotential ground on both ends, better with suitable rings.
Otherwise, a standard cable can be used also but put inside a pipe or metallic sheath (the sheath ends must be grounded with suitable rings) and an earth external wire for the motor ground.

The cable for the 4÷20mA signal that controls the VSD, must be shielded, only LMV5x side ends connected to the equipotential terminal. If the VSD is not inside the control panel, the cable must be laid separately inside a metallic sheath earthed by means of rings.

As for the speed sensor cable and QRI detection probe cable, provide a “Ethernet “ cat.5 or 6 cable, inside a metallic sheath (with ends earthed by means of rings) and laid separately from the motor cable.
As the sensor uses three wires, divide and twist the pairs to avoid noises.
Alternatively, provide a 3x2x0,50 twisted cable Liycy type (see Annex 2).

In case of O2 trim control version, O2 probe and PLL52 board must be connected by means of a 3x2x0,50 twisted cable Liycy type (see Annex 2).

NB: *when a shielding has both ends wired to Earth, be sure they are at the same potential. If there is any Voltage difference, ground just one of the two ones, generally the one closest to the weakest, respect to EMC, component. Anyway give way to the burner control, that is wire to ground the end of the shielding closest to the LMV.*
For instance, the cable between LMV and VSD, if the shielding has only one end wired to Earth, this one has to be the one LMV side.

Annex1 – Example for motor cable

INDUSTRIA E AUTOMAZIONE

FG70H2R+T 0,6/1 kV
A RIDOTTA EMISSIONE DI ALOGENI

FG70H2R+T 0,6/1 kV
WITH REDUCED HALOGEN EMISSION

CARATTERISTICHE TECNICHE

Colore delle anime:		UNEL 00722 / VDE 0293 (Tab. 8)
Conduttori:	rame rosso elettrolitico	normativa CEI EN 60228 Cl.5 (Tabella 9)
Isolante:	elastomero silanico di qualità G7	normativa CEI 20-11 - CEI EN 50363
Separatore:	nastro poliestere-mylar	
Schermatura:	a treccia capillari di rame rosso elettrolitico cop. > 80 %	
Guaina esterna:	PVC di qualità TM2	normativa CEI 20-11 - CEI EN 50363
Colore della guaina:	Grigio RAL 7035	
Prova N.P. verticale:	su singolo conduttore o cavo isolato	normativa CEI EN 60332-1-2
Prova GAS emessi:	durante la combustione	normativa CEI EN 50267-2-1
Resistenza agli olii:		normativa CEI 20-34/0-1
Prova N.P.I.:		normativa CEI 20-22/2
Resistenza elettrica:	relativamente alla sezione	normativa CEI EN 60228 (Tabella 9)
Tens. nominale Uo/U:	0,6/1 kV	
Tensione di prova:	4000 V	
Temperatura d'esercizio:	(- 25 °C ÷ + 90 °C)	
Temperatura di corto circuito:	250 °C	
Marcatura:	BERICA CAVI S.P.A. (VI) FG70H2R + T 0,6/1 kV O.R. CEI 20-22 II CE Anno/Lotto - N° Anime x Sezione + T	
Raggio di curvatura:	minimo 15 volte diametro esterno	

TECHNICAL FEATURES

Cores colour code:		*UNEL 00722 / VDE 0293 (Tab. 8)*
Conductors :	*fine wires stranded of bare copper*	*CEI EN 60228 Cl.5 (Tab.9) rule*
Insulation:	*G7 quality rubber*	*CEI 20-11 - CEI EN 50363 rules*
Assembling:	*polyester-mylar tape*	
Shield:	*bare copper braid 80% covering*	
Outer sheath:	*TM2 quality PVC*	*CEI 20-11 - CEI EN 50363 rules*
Sheath colour code:	*Grey RAL 7035*	
Vertical fire retardant test:	*on single conductor or insulated cable*	*CEI EN 60332-1-2 rule*
Emission GAS test:	*during the combustion*	*CEI EN 50267-2-1 rule*
Oil resistant test:		*CEI 20-34/0-1 rule*
Flame retardant test:		*CEI 20-22/2 rule*
Electric resistance:	*according to*	*CEI EN 60228 (Tab. 9)*
Working voltage:	*0,6/1 kV*	
Testing voltage:	*4000 V*	
Working temperature:	*(-25 °C ÷ +90 °C)*	
Short circuit temperature:	*250 °C*	
Outer printing:	*BERICA CAVI S.P.A. (VI) FG70H2R + T 0,6/1 kV O.R. CEI 20-22 II CE - Year/Lot - Nr. of cond. by cross sect. + T.*	
Bending radius:	*cable outer diameter x 15*	

FG70H2R+T 0,6/1 kV
A RIDOTTA EMISSIONE DI ALOGENI

FG70H2R+T 0,6/1 kV
WITH REDUCED HALOGEN EMISSION

TIPO *TYPE*	Ø ESTERNO MEDIO *MEDIUM Ø OUTER*	PESO MEDIO *MEDIUM WEIGHT*	CODICE PRODOTTO *ITEM CODE*
n° x mm²	mm	kg x km	
3x1,5 + 1G1,5	10,8	173,0	B5803150
3x2,5 + 1G2,5	12,6	254,0	B5803250
3x4 + 1G4	15,3	365,0	B5803400
3x6 + 1G6	17,4	497,0	B5803600
3x10 + 1G10	20,6	730,0	B58031000
3x16 + 1G16	24,8	1095,0	B58031600
3x25 + 1G25	30,1	1680,0	B58032500

TIPO *TYPE*	Ø ESTERNO MEDIO *MEDIUM Ø OUTER*	PESO MEDIO *MEDIUM WEIGHT*	CODICE PRODOTTO *ITEM CODE*
n° x mm²	mm	kg x km	

Annex 2 – Example for sensor cable

CAVI TIPO "Li-YCY-P"
A COPPIE SCHERMATI A TRECCIA

IMPIEGO: Cavi schermati per segnali e trasmissione dati per applicazioni in elettronica ed informatica, efficaci contro le interferenze elettromagnetiche ed atti ad offrire una protezione contro influenze capacitive dovute a campi elettrici.

CABLES TYPE "Li-YCY-P"
TWISTED PAIRS, TINNED COPPER BRAID SHIELD

STANDARD USE: Signal and data transmission shielded cables for electronics and information technology applications, effective against electromagnetic interferences and suited to offer protection against capacitive influences due to electric fields.

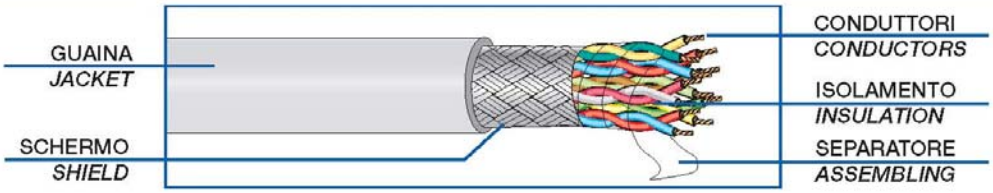

CARATTERISTICHE TECNICHE		*TECHNICAL FEATURES*
CONDUTTORI: Flessibili in rame rosso sec. CEI 20-29 (IEC 228) Cl. 5, VDE 0295 Cl. 5, NF C32-013 (0,34 mm² : VDE 0295 Cl.2)		***CONDUCTORS:*** *Flexible bare copper conductors* *CEI 20-29 (IEC 228) Cl. 5, VDE 0295 Cl. 5,* *NF C32-013 Ref. (0,34 mm² : VDE 0295 Cl.2)*
ISOLANTE: Polivinilcloruro (PVC) Sec. CEI 20-11 Cl. R2, VDE 0207 Cl. YI2 Codici colori: a norma DIN 47100		***INSULATION:*** *Polyvinylchloride (PVC)* *CEI 20-11 Cl. R2, VDE 0207 Cl. YI2 Ref.* *Colour code according to DIN 47100*
SEPARATORE: Nastro di poliestere		***ASSEMBLING:*** *Polyester tape helically wound*
SCHERMATURA: A treccia di rame stagnato Cordina di continuità a richiesta		***SHIELD:*** *Tinned copper braid* *On request with drain wire*
GUAINA ESTERNA: Polivinilcloruro (PVC) Sec. CEI 20-20 Cl. TM2, VDE 0207 Cl. YM2 colore: grigio (diverso a richiesta)		***JACKET:*** *Polyvinylchloride (PVC)* *CEI 20-20 Cl. TM2, VDE 0207 Cl. YM2 Ref.* *colour: grey or on request*
RESISTENZA ELETTRICA DEI CONDUTTORI: 0,14 mm²: <148 Ohm/Km 0,25 mm²: <79 Ohm/Km 0,34 mm²: <55 Ohm/Km 0,50 mm²: <39 Ohm/Km 0,75 mm²: <26 Ohm/Km 1mm²: <19,5 Ohm/Km		***ELECTRICAL CONDUCTOR RESISTANCE:*** *0,14 mm²: <148 Ohm/Km* *0,25 mm²: <79 Ohm/Km* *0,34 mm²: <55 Ohm/Km* *0,50 mm²: <39 Ohm/Km* *0,75 mm²: < 26 Ohm/Km* *1 mm²: <19,5 Ohm/Km*
TEMPERATURA DI ESERCIZIO: posa fissa: -25°C + 70°C posa mobile: -15°C + 70°C		***WORKING TEMPERATURE:*** *fixed installation: -25°C + 70°C* *flexing: -15°C + 70°C*
RAGGIO DI CURVATURA: 15 volte il diametro del cavo		***BENDING RADIUS:*** *15 times overall diameter of cable*
TENSIONE DI ESERCIZIO: 250 V		***WORKING VOLTAGE:*** *250 V*
TENSIONE DI PROVA: 1500 V		***TEST VOLTAGE:*** *1500 V*

CAVI TIPO "Li-YCY-P"
A COPPIE SCHERMATI A TRECCIA

CABLES TYPE "Li-YCY-P"
TWISTED PAIRS, TINNED COPPER BRAID SHIELD

PROVA N.P. FIAMMA:
Standard: sec. CEI 20-35 (IEC 332.1)
A richiesta: sec. CEI 20-22 II (IEC 332.3A)

FLAME RETARDANT TEST:
Standard: CEI 20-35 (IEC 332.1) Ref.
On request: CEI 20-22 II (IEC 332.3A) Ref.

IMPEDENZA DI TRASFERIMENTO:
max 200 mohm/m (f<10MHz)

SURFACE TRANSFER IMPEDANCE:
max 200 mohm/m (f<10MHz)

CAPACITA' DI LAVORO:
cond/cond: 120 nF/km (nom.)
cond/sch: 180 nF/km (nom.)

CAPACITANCE:
cond/cond: 120 nF/km (nom.)
cond/shield: 180 nF/km (nom.)

CODICE *CODE*	FORMAZIONE *TYPE*	ø esterno medio *outer diameter ø*	Peso medio Kg/Km *Medium weight Kg/Km*
28.204.1.02.1.000	2x2x0.14	5.6	40.0
28.204.1.03.1.000	3x2x0.14	5.9	47.0
28.204.1.04.1.000	4x2x0.14	6.2	61.0
28.204.1.05.1.000	5x2x0.14	7.2	68.0
28.204.1.06.1.000	6x2x0.14	7.6	76.0
28.204.1.07.1.000	7x2x0.14	7.6	82.0
28.204.1.08.1.000	8x2x0.14	8.4	90.0
28.204.1.10.1.000	10x2x0.14	9.8	118.0
28.204.1.12.1.000	12x2x0.14	10.2	130.0
28.204.1.16.1.000	16x2x0.14	11.2	160.0
28.204.1.18.1.000	18x2x0.14	11.7	186.0
28.204.1.20.1.000	20x2x0.14	12.4	200.0
28.204.1.25.1.000	25x2x0.14	14.0	273.0

CODICE *CODE*	FORMAZIONE *TYPE*	ø esterno medio *outer diameter ø*	Peso medio Kg/Km *Medium weight Kg/Km*
28.204.1.02.4.000	2x2x0.34	7.3	68.0
28.204.1.03.4.000	3x2x0.34	7.8	82.0
28.204.1.04.4.000	4x2x0.34	8.6	96.0
28.204.1.05.4.000	5x2x0.34	10.0	110.0
28.204.1.06.4.000	6x2x0.34	10.6	130.0
28.204.1.07.4.000	7x2x0.34	10.6	145.0
28.204.1.08.4.000	8x2x0.34	11.5	150.0
28.204.1.10.4.000	10x2x0.34	13.0	190.0
28.204.1.12.4.000	12x2x0.34	13.5	220.0
28.204.1.16.4.000	16x2x0.34	15.2	250.0
28.204.1.18.4.000	18x2x0.34	16.0	275.0
28.204.1.20.4.000	20x2x0.34	17.1	290.0
28.204.1.25.4.000	25x2x0.34	19.5	400.0

28.204.1.02.3.000	2x2x0.25	5.8	54.0
28.204.1.03.3.000	3x2x0.25	7.0	65.0
28.204.1.04.3.000	4x2x0.25	7.3	89.0
28.204.1.05.3.000	5x2x0.25	8.0	99.0
28.204.1.06.3.000	6x2x0.25	9.0	114.0
28.204.1.07.3.000	7x2x0.25	9.0	120.0
28.204.1.08.3.000	8x2x0.25	9.6	126.0
28.204.1.10.3.000	10x2x0.25	10.3	160.0
28.204.1.12.3.000	12x2x0.25	11.4	171.0
28.204.1.16.3.000	16x2x0.25	13.1	238.0
28.204.1.18.3.000	18x2x0.25	13.6	248.0
28.204.1.20.3.000	20x2x0.25	14.2	275.0
28.204.1.25.3.000	25x2x0.25	16.4	340.0

28.204.1.02.5.000	2x2x0.50	7.6	75.0
28.204.1.03.5.000	3x2x0.50	9.0	125.0
28.204.1.04.5.000	4x2x0.50	10.0	140.0
28.204.1.05.5.000	5x2x0.50	10.8	160.0
28.204.1.06.5.000	6x2x0.50	11.7	190.0
28.204.1.07.5.000	7x2x0.50	11.7	220.0
28.204.1.08.5.000	8x2x0.50	14.0	250.0
28.204.1.10.5.000	10x2x0.50	15.0	300.0
28.204.1.12.5.000	12x2x0.50	15.7	345.0
28.204.1.16.5.000	16x2x0.50	17.6	450.0

CAVI TIPO "Li-YCY-P"
A COPPIE SCHERMATI A TRECCIA

CABLES TYPE "Li-YCY-P"
TWISTED PAIRS, TINNED COPPER BRAID SHIELD

CODICE *CODE*	FORMAZIONE *TYPE*	ø esterno medio *outer diameter ø*	Peso medio Kg/Km *Medium weight Kg/Km*
28.204.1.02.6.000	2x2x0.75	8.6	103.0
28.204.1.03.6.000	3x2x0.75	9.0	128.0
28.204.1.04.6.000	4x2x0.75	10.6	167.0
28.204.1.05.6.000	5x2x0.75	12.0	215.0
28.204.1.06.6.000	6x2x0.75	12.8	240.0
28.204.1.07.6.000	7x2x0.75	12.8	265.0
28.204.1.08.6.000	8x2x0.75	14.6	306.0
28.204.1.10.6.000	10x2x0.75	16.0	355.0
28.204.1.12.6.000	12x2x0.75	17.0	405.0
28.204.1.16.6.000	16x2x0.75	20.5	565.0

CODICE *CODE*	FORMAZIONE *TYPE*	ø esterno medio *outer diameter ø*	Peso medio Kg/Km *Medium weight Kg/Km*
28.204.1.02.7.000	2x2x1	9.4	122.0
28.204.1.03.7.000	3x2x1	11.5	179.0
28.204.1.04.7.000	4x2x1	12.8	237.0
28.204.1.05.7.000	5x2x1	13.8	297.0

Appendix: Example for wiring, earthing and shielding the LMV5-System

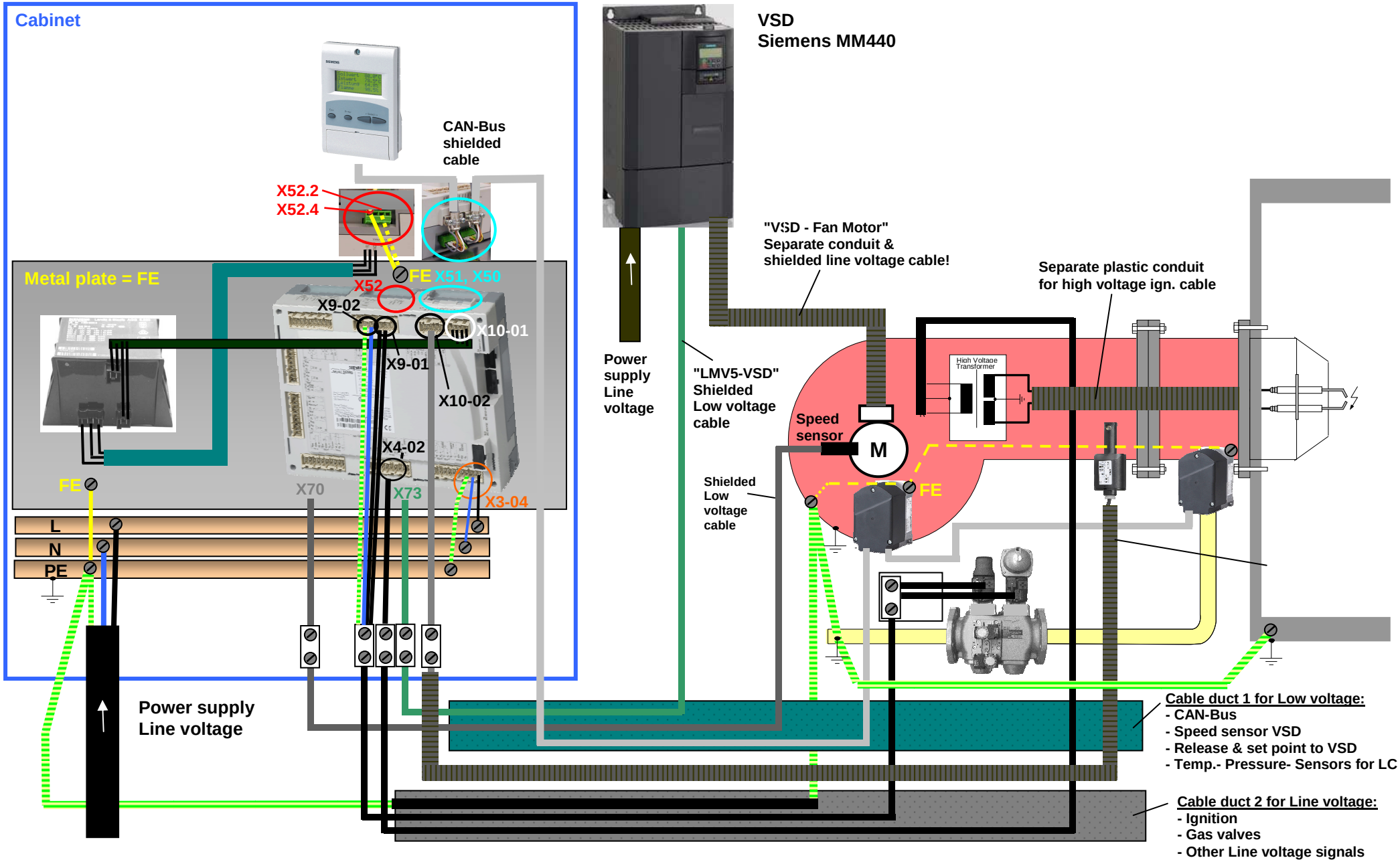

Addendum 4: LMV52... with O2 trim control and O2 module

General

The LMV52... system is an extended LMV51... system. A special feature of the LMV52… is control of the residual oxygen content to increase the boiler's efficiency.

In addition to the features of the LMV51..., the LMV52... provides O2 trim control, control of a maximum of 6 actuators, control of a VSD, and acquisition of cumulated fuel consumption and current fuel throughput. The LMV52... system uses an O2 sensor (QGO20...), an external O2 module, and the standard components of the LMV51... system.

ATTENTION: for the proper burner adjustment, it is necessary to install a fuel meter for each burner.

The PLL... O2 module is a detached measuring module for the QGO20... sensor and for 2 temperature sensors (Pt1000 / LG-Ni 1000). The module communicates with the LMV52… via CAN bus.

The fuel meters must be connected directly to the fuel-related inputs of the basic unit. On the AZL5... display and operating unit, the individual consumption values can be read out and the meter readings can be reset.

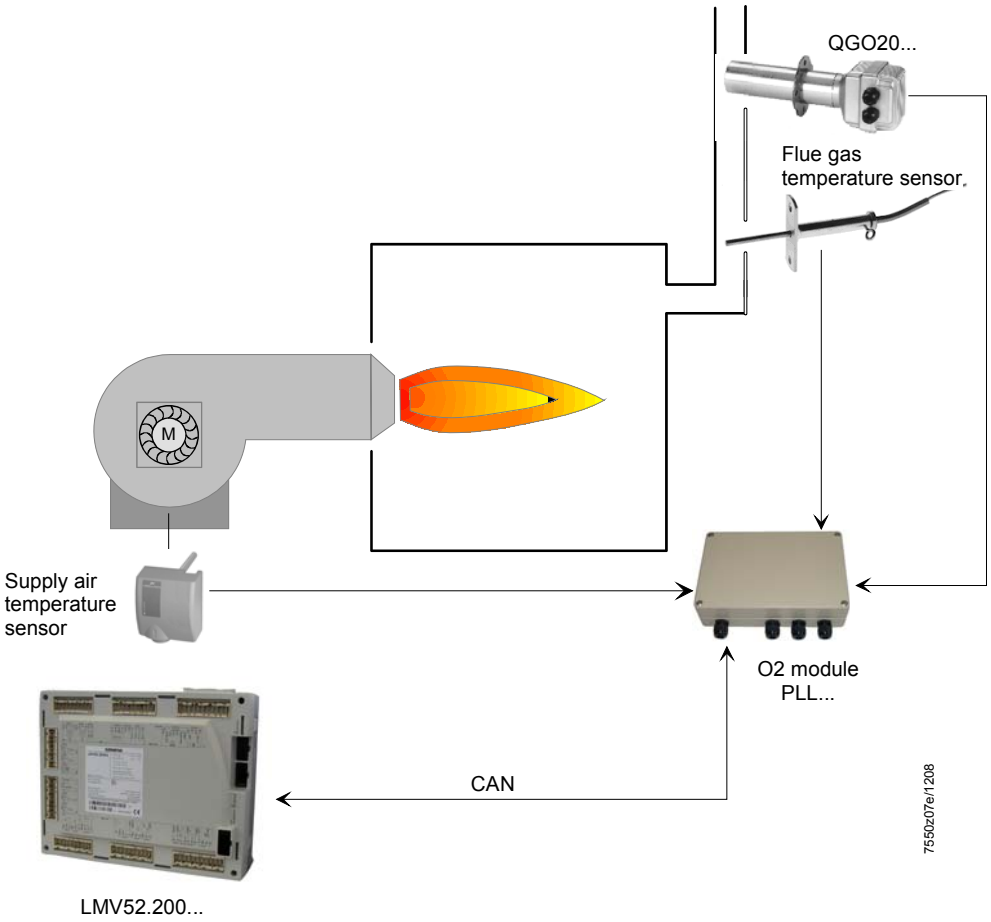

Determination of the maximum cable length

The maximum cable length between transformer and CAN bus users is dependent on the type of cable (cross-sectional area), the number of actuators and the type of actuator used (current).
The following graphs can be used to determine the maximum CAN bus cable lengths between the transformer and group of actuators or the AZL5…, depending on the relevant influencing factors.
The assumption was made that the actuators within the group are close to one another.
The **minimum** cross-sectional area for the system examples shown results from the start of the curve.
The **maximum** cable lengths for the defined system cables AGG5.641 and AGG5.631 result from the points of intersection in the graph.

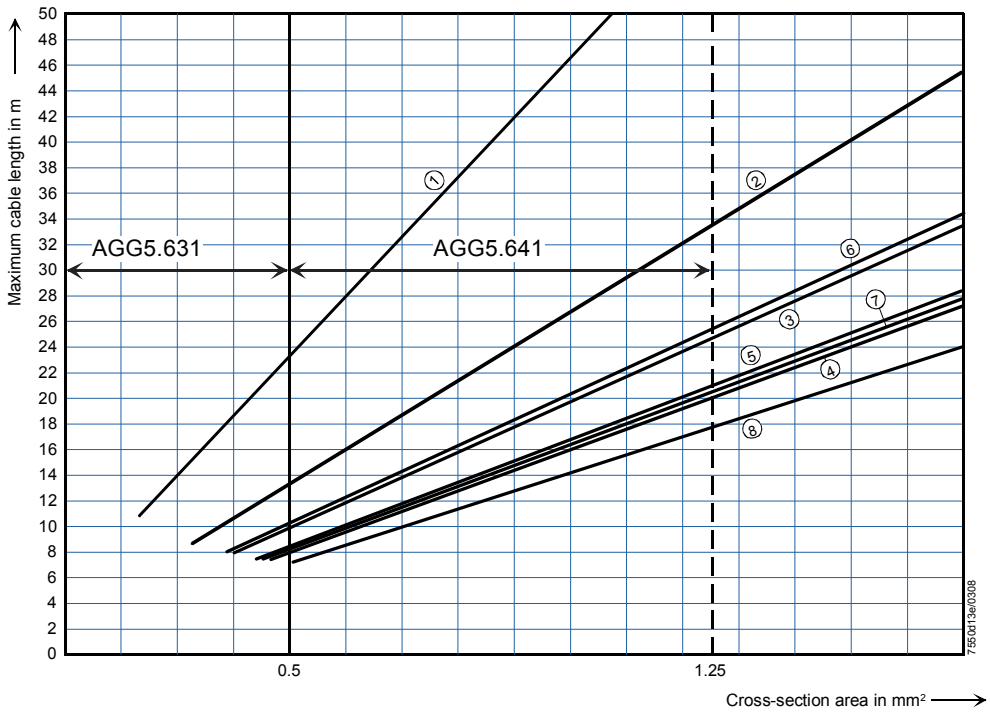

AGG5.631 (cable type 2)
AGG5.641 (cable type 1)

①	1 x SQM45...	⑤	2 x SQM48...
②	2 x SQM45...	⑥	1 x SQM45... + 1 x SQM48...
③	3 x SQM45...	⑦	2 x SQM45... + 1 x SQM48...
④	4 x SQM45...	⑧	3 x SQM45... + 1 x SQM48...

CAN bus connection between transformer and actuator group

When connecting a PLL52... O2 module, the maximum permissible cable length of a network is to be reduced by 2 m.

Example: - System cable: AGG5.641 (connecting cable to the actuators)
- Actuators: 2 x SQM45...

The point of intersection of the vertical line for the AGG5.641 (1.25 mm^2) and curve ① (2 x SQM45...) gives a maximum cable length of 33.4 m between the transformer and the group of actuators.

Example 1

Installation of all components in the burner;
CAN bus cable «LMV5... →shielding last actuator » 20 m

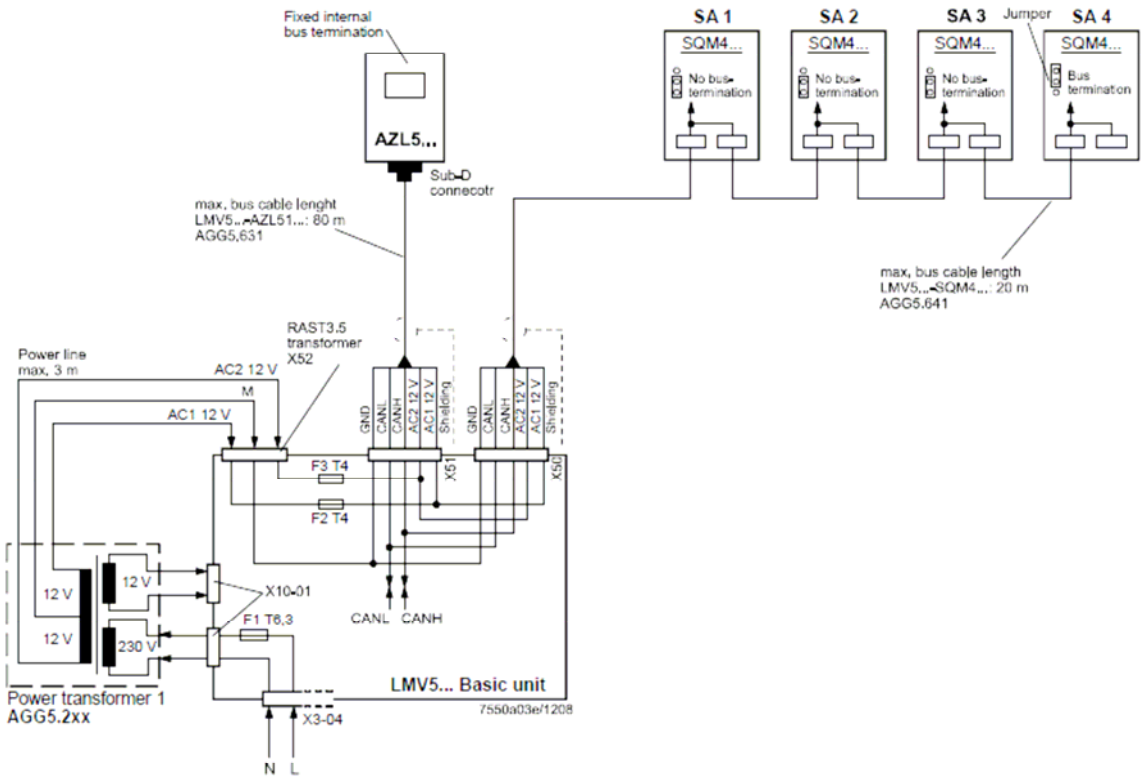

Note on example 1 **Total length of CAN bus cable ≤ 100 m**

Example 2

LMV5... basic unit in the control panel, actuator on the burner; CAN bus cable «LMV5... → SA» > 20 m

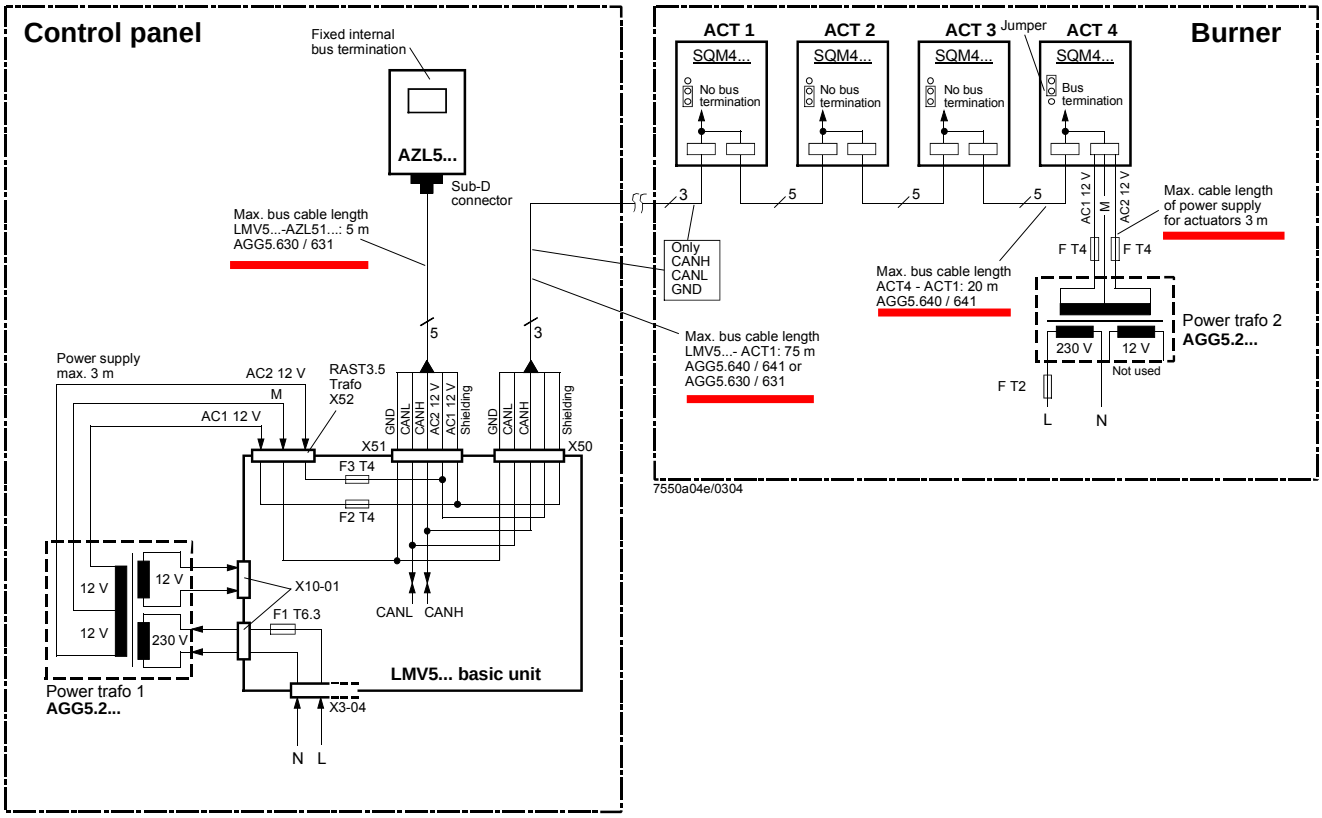

Notes on example 2

Total length of CAN bus cable ≤ 100 m

Whenever the distance between the LMV5... and the last actuator exceeds 20 m, or if more than one SQM48 is used on the burner (refer to sizing chart “Determination of maximum cable length“), a second transformer is required for powering the actuators.

In that case, transformer 1 powers the LMV5... basic unit and the AZL5... display and operating unit (**Fig. 1**). Transformer 2 powers the actuators (**Fig. 2**).

With the CAN bus cable connections from the LMV5... (**Fig. 1**) to the first actuator (**Fig. 2**), the 2 voltages AC1 and AC2 on the LMV5... side must **not** be connected and only cables CANH, CANL and M (+shielding) are to be connected to the first actuator (**Fig. 2**).

In that case, the actuators must be powered by a second transformer which to be located near the actuators.

The power from that transformer (lines AC1, AC2, M) must be fed to the actuator (ACT4 in the example above) and then connected through via bus cable AGG5.640 (cable type 1) to all the other actuators.

The fuses required for transformer 1 are accommodated in the LMV5... basic unit.

For transformer 2, these 3 fuses must be located close to the transformer (for type, refer to Basic Documentation P7550).

Example 3a

Installation of all components in the burner;
CAN bus cable «LMV52... ↔ SA» > 20 m with 6 actuators and O2 module PLL52...

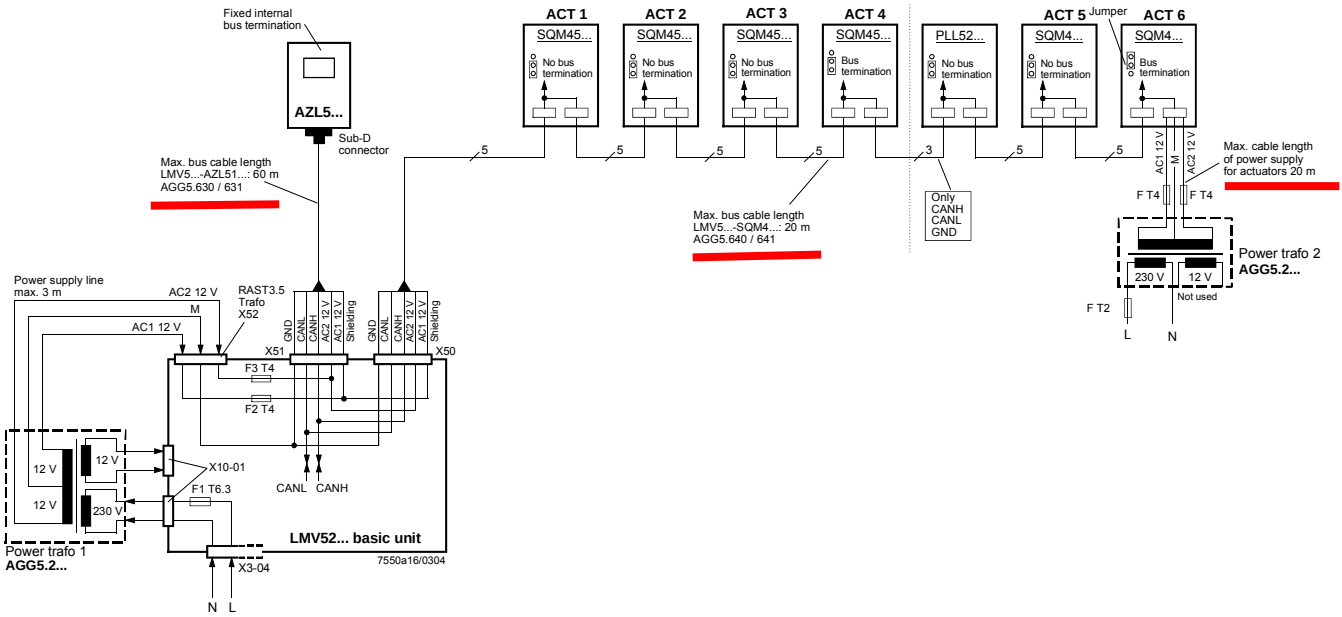

Example 3b

Installation in the control panel, actuator on the burner;
CAN bus cable «LMV52... ↔ SA» > 25 m with 4 actuators and O2 module PLL52...

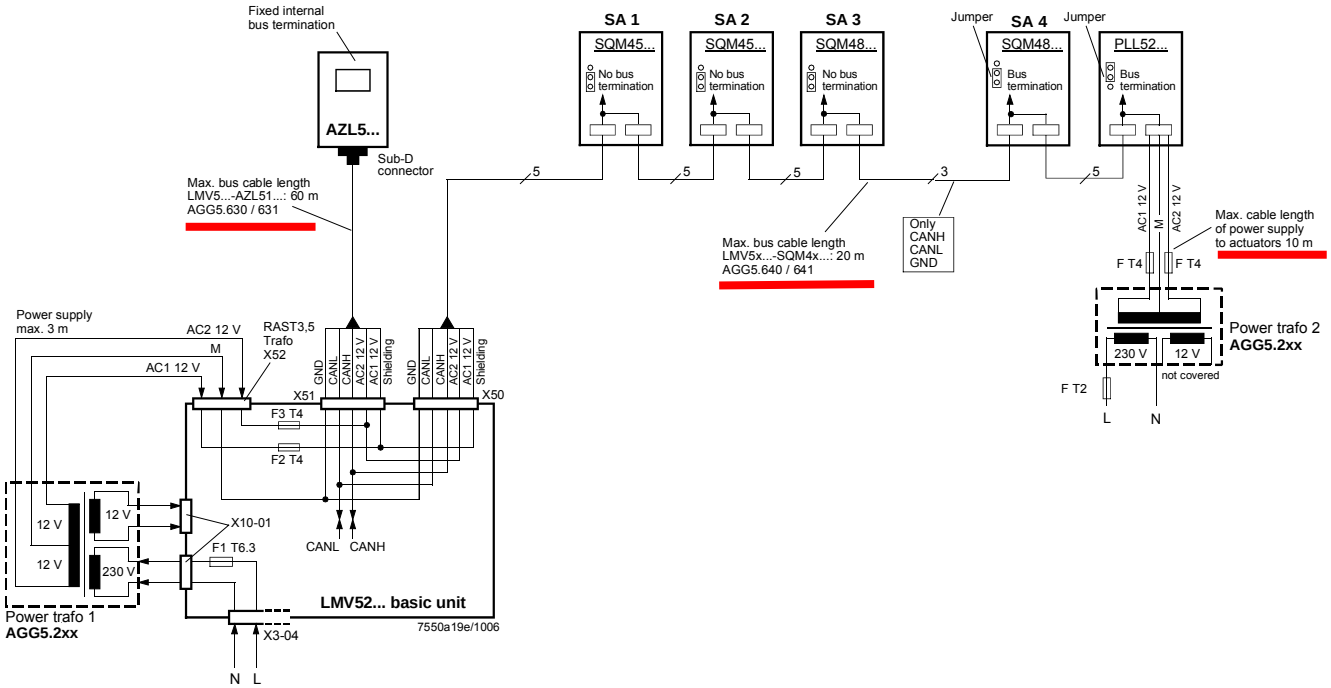

Notes on example 3a / 3b

CAN bus cable with LMV52... and more than 4 actuators and O2 module PLL52...

On LMV52... applications with more than 4 actuators (SQM45...), a second transformer is required for powering the extra actuators.

In that case, transformer 1 powers the LMV52... basic unit, the **AZL5...**, and the first 4 actuators.

Interrupt the connection between the components at a suitable location. On the actuator side, the 2 voltages AC1 and AC2 must **not** be connected but only lines «CANH, CANL and M» (+shield) to the O2 module and the other actuator.

In that case, the actuators (SA5, SA6) and the O2 module must be powered by a second transformer to be located near the actuators and the O2 module.

Connect the power supply line from that transformer to the O2 module PLL52… (in example 3a «SA6» / in example 3b «Auxiliary terminal) (lines AC1, AC2, M) and from there, via bus cable AGG5.640 (cable type 1), through to the second actuator (SA) and the O2 module.
The fuses required for transformer 1 are accommodated in the LMV52... basic unit.

Optionally, the supply voltage can also be delivered via a conduit box and fed into the connecting line between SA4 and PLL52…

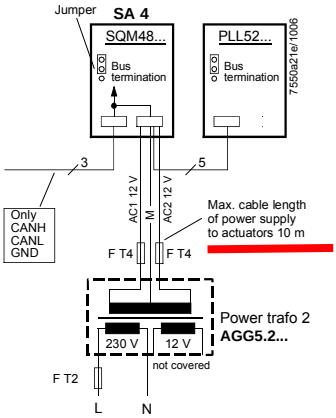

For transformer 2, the OEM must fit the 3 fuses close to the transformer.

O2 module

In comparison with the LMV51... system, the extra components to be connected with the LMV52… system are the O2 module and the O2 sensor QGO... and, optionally, the combustion air and flue gas temperature sensors. The O2 module is to be connected to the basic unit via the CAN bus. The O2 module must be located in the vicinity of the QGO... (< 10 m), aimed at keeping interference on the sensitive detector lines as low as possible. For sensor heating, the O2 module requires a separate mains connection facility.

18.8.1 Inputs and outputs

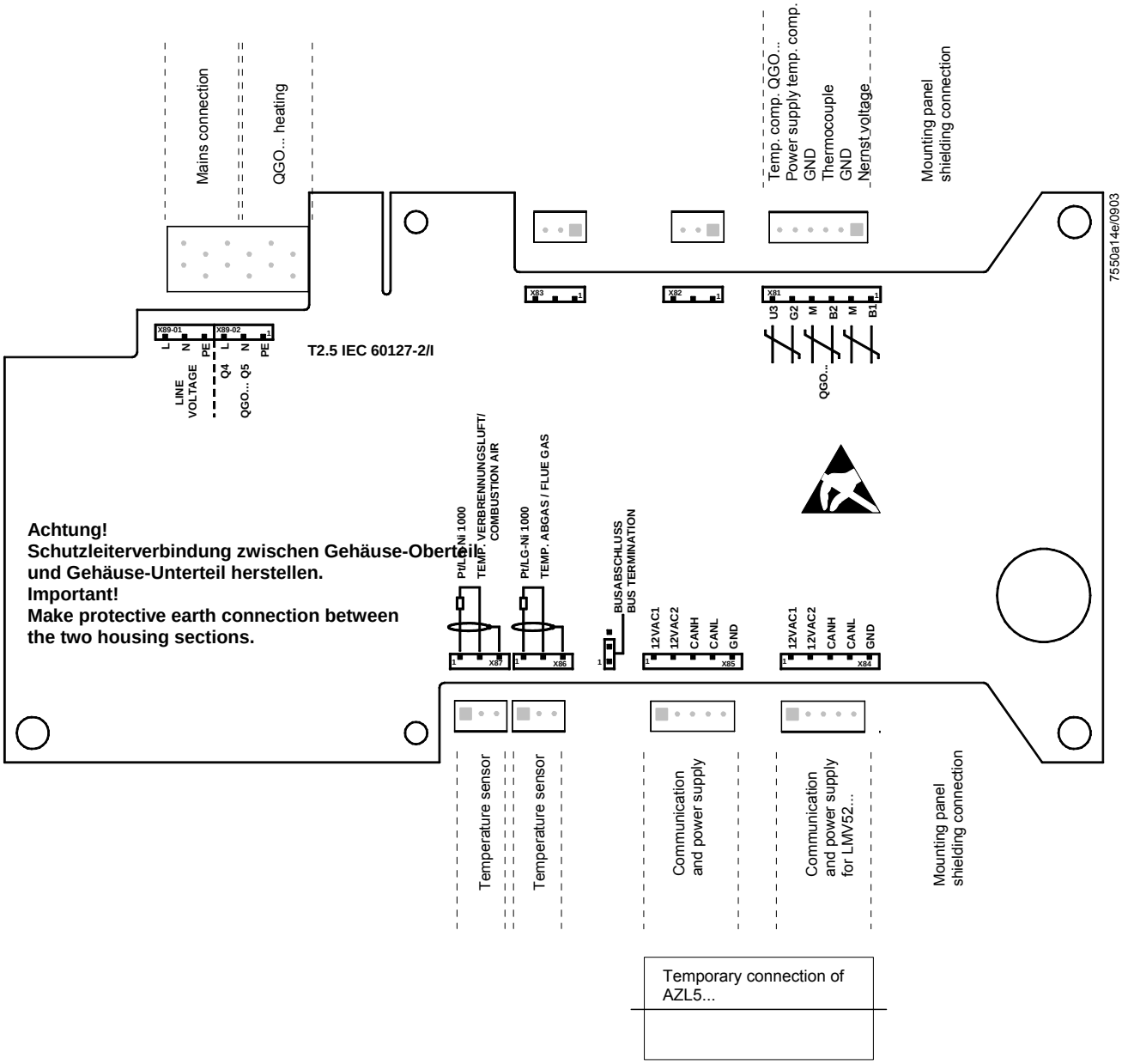

QGO20...

Montageanleitung
Mounting instruction
Instruction de montage
Monteringsanvisning
Montage-aanwijzing
Istruzioni di montaggio
Asennusohje
Instrucciones de montaje
Monteringsinstruktion
Montasjeanvisning

7842mb01/1200

Fühler aus Keramik - zerbrechlich
Ceramic detector - fragile
Sonde en céramique - fragile

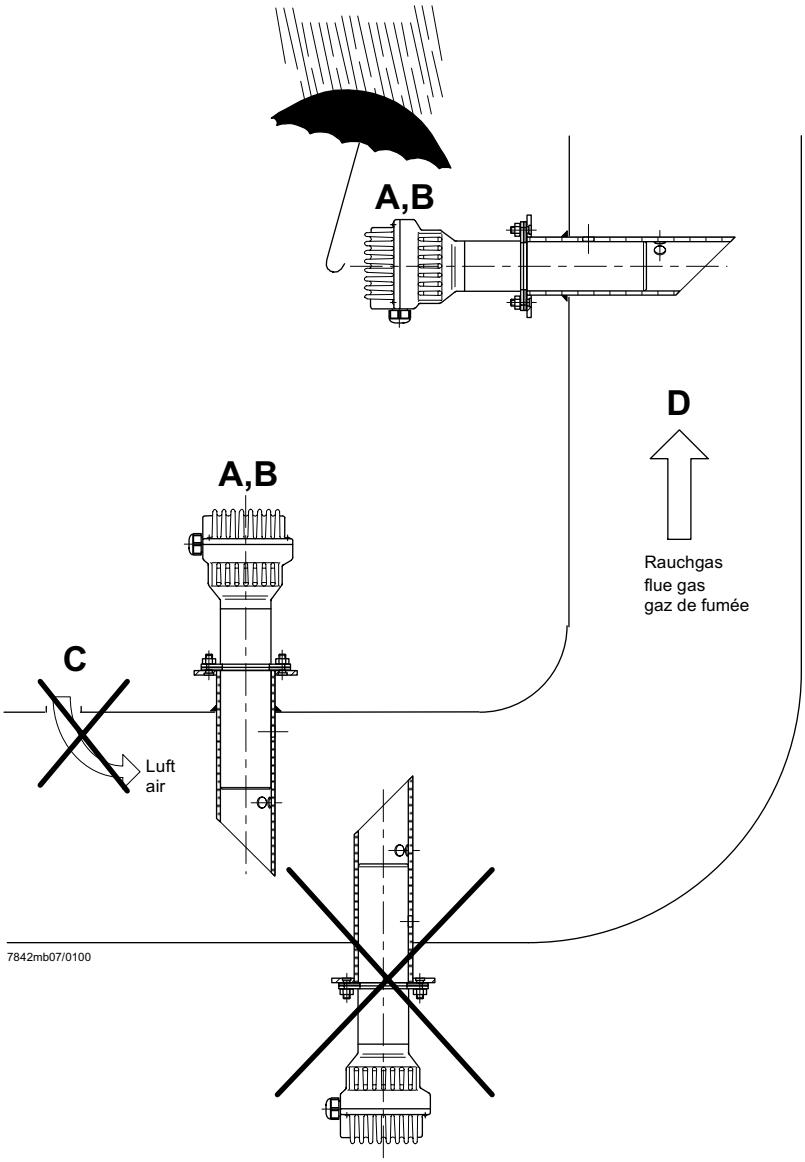

7842mb07/0100

O2-Fühler QGO20... und Rauchgassammler AGO20...

Voraussetzungen für eine korrekte messtechnische Erfassung des O2-Gehaltes der Rauchgase:

A - QGO20... **nur** mit Rauchgassammler AGO20... einsetzen

B - Einbauort des QGO20... so nahe am Brenner wie möglich, in einem Bereich ohne Turbulenzen und Inhomogenitäten. Nicht direkt im Bereich von Klappen oder Bögen montieren. Idealer Abstand: 5 x Kamindurchmesser.

C - Zwischen Brenner und Fühler darf keine Luft in die Rauchgase gelangen.

D - Strömungsgeschwindigkeit 1...10 m/s. Rauchgastemperatur am Messort ⩽ 300°C

O2-detector type QGO20... and flue gas collector type AGO20...

Presupposition for the correct measurement of the O2 content of the flue gases:

A - Use QGO20... **only** with flue gas collector type AGO20...

B - Mounting position of the QGO as close as possible to the burner, in a homogenous area without any turbulences. Do not mount the QGO20... in the area of dampers or curves. Ideal distance: Five times the diameter of the stack.

C - No air must be allowed to join the flue gases on their way from the burner to the detector.

D - Flow velocity 1...10 m/s. Flue gas temperature at the measuring position ⩽ 300°C

Sonde O2 QGO20... et collecteur des gaz de fumée AGO20...

Conditions requises pour une détection correcte de la teneur en O2 des gaz de fumée:

A - Utiliser le QGO20... **exclusivement** avec le collecteur des gaz de fumée AGO...

B - Lieu de montage du QGO20... le plus près possible du brûleur, dans un domaine homogène sans turbulences. Ne pas le monter dans le domaine des clapets ou dans les courbes. Distance idéale: Cinq fois le diamètre de la cheminée.

C - Entre le brûleur et la sonde, il ne doit pas pénétrer d´air dans les gaz de fumée.

D - Vitesse d´ecoulement 1...10 m/s. Température des gaz fumée au lieu de la mesure ⩽ 300°C

Anschluss-Schema

6-adriges abgeschirmtes Kabel. Adern möglichst paarweise verdrillt. Abschirmung an Klemme GND des RPO... . Abschirmung nicht mit Schutzleiter oder M verbinden!

Anschlusskabel z.B.:

LifYCY	6 x 2 x 0,20 / 22 oder
LiYCY	6 x 2 x 0,20
B1 (+)	Signal O2-Messzelle
M (-)	Masse für B1, B2
B2 (+)	Thermoelement-Spannung
M (-)	
U3 (+)	Signal Temperaturkompensations-element
G2 (-)	Speisung Temperaturkompensations-element
GND	Masse für Anschirmung

3 x 1,5 mm^2:

Q4	Fühlerheizung (AC 230 V)
Q5	Fühlerheizung (AC 230 V)

⏚ Erde*

Vorsicht bei den Anschlüssen U3 und G2!
Ein Fehlverdrahten der Anschlüsse führt zu einem Ausfall des Kompensationselementes.

* Am RPO... steht nur 1 Erdleiterklemme zur Verfügung. Beide Erdleiter müssen auf **eine** Klemme geführt werden.

Wiring diagram

Shielded 6-core cable. Wires should be twisted in pairs. Screen must be connected to terminal GND of the RPO... . Do not connect the shielding to the protective earth or M!

Connecting cable e.g.:

LifYCY	6 x 2 x 0,20 / 22 or
LiYCY	6 x 2 x 0,20
B1 (+)	Signal from O2-measuring cell
M (-)	Ground for B1, B2
B2 (+)	Thermocouple voltage
M (-)	
U3 (+)	Signal from temperatue compensation element
G2 (-)	Power supply for temperature compensation element
GND	Ground for screening

3 x 1,5 mm^2:

Q4	QGO... detector heating (AC 230 V)
Q5	QGO... detector heating (AC 230 V)

⏚ Earth*

Caution when connecting U3 and G2!
Faulty wiring leads to failure of the compensation element.

* At the RPO..., there is only 1 earth terminal available. Both earth wires must be connected to **the same** earth terminal.

Schéma de raccordement

Câble blindé à 6 brins. Brins torsadés si possible par paires. Blindage sur la borne GND du RPO... . Ne pas connecter le blindage avec le conducteur de protection ou M!

Câble de raccordement p.ex.:

LifYCY	6 x 2 x 0,20 / 22 ou
LiYCY	6 x 2 x 0,20
B1 (+)	Signal de la cellule de mesure d´O2
M (-)	Masse pour B1, B2
B2 (+)	Tension de thermocouple
M (-)	
U3 (+)	Signal de l´élément de cpmpensation de température
G2 (-)	Alimentation de l´élément de compensation de température
GND	Masse du blindage

3 x 1,5 mm^2:

Q4	Chauffage de sonde QGO... (AC 230 V)
Q5	Chauffage de sonde QGO... (AC 230 V)

⏚ Terre*

Prière de faire attention lors des raccordements U3 et G2. Une erreur de câblage des fils de raccordement conduit à une destruction de l´élément de compensation.

* Le RPO... ne dispose que d´une seule borne de mise à la terrre. Les deux fils de mise à la terre doivent être connectés sur **la même** borne.

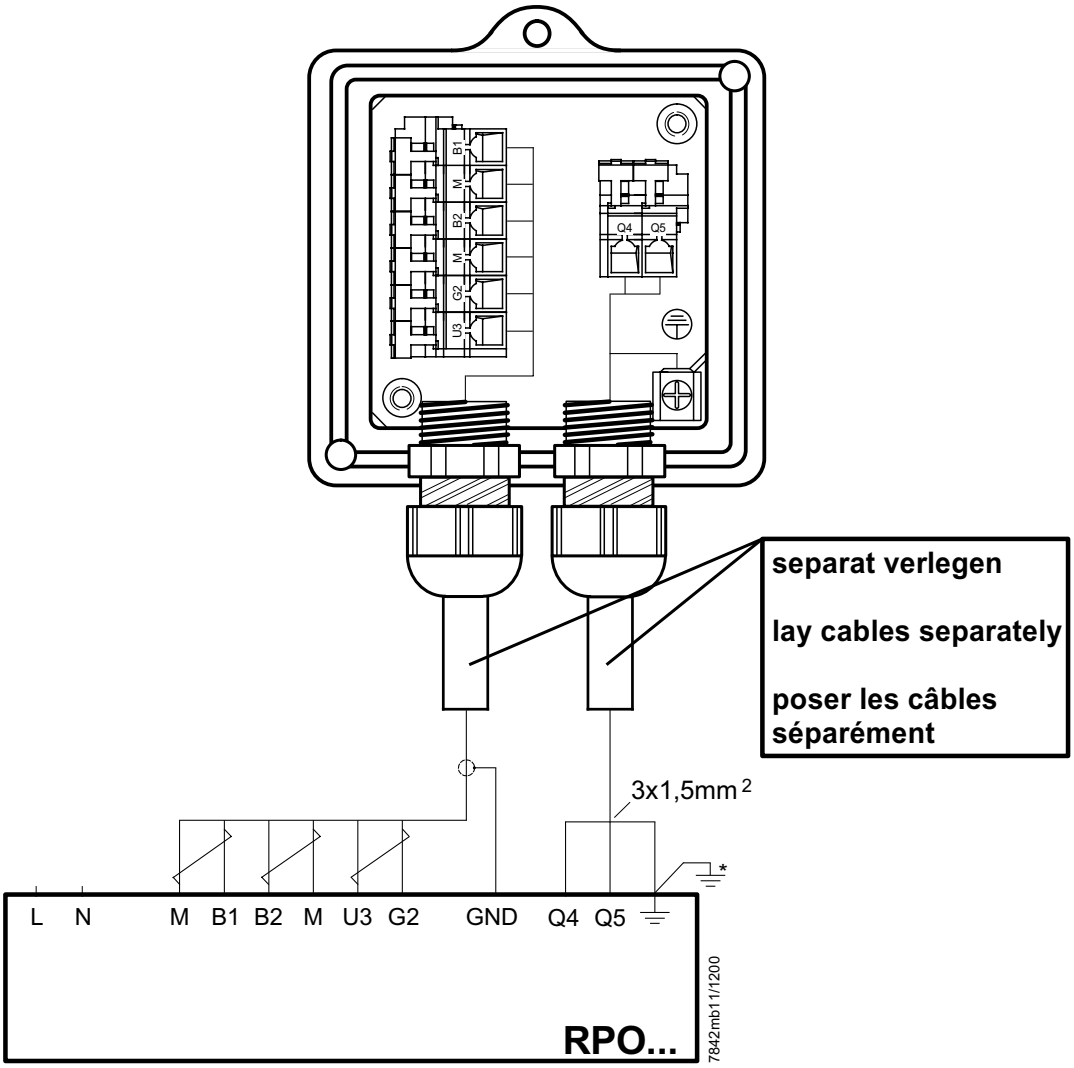

Hinweise für Installation und Inbetriebnahme

- Distanz zwischen Wand des Rauchgaskanals und Rauchgasaustritt (B) des AGO20... min. 10 mm

- Die Kaminisolierung darf nicht über den Anschlussflansch hinausragen und dadurch den Fühlerkopf isolieren (therm. Überlastung).
  Der Fühlerkopf muss frei bleiben!
  Strahlungswärme vermeiden; z.B. durch Wärmeleitbleche

- Bei der ersten Inbetriebnahme ist das Mess-Sytem ca. 2 Stunden vor Gebrauch einzuschalten.
  Bei kurzen Abschaltungen der Anlage (1-2 Wochen) ist es empfehlenswert, das Mess-System (QGO... und RPO) nicht auszuschalten.

- Während des Aufheizvorganges kann der Fühler falsch messen.

- QGO20... nie im kalten Zustand bei laufendem Brenner im Kamin einsetzen.

- Nach Fühlertausch, Ansteuerung der Fühlerheizung überprüfen.

- Spannung an Q4 - Q5 muss im 2 s Takt pulsieren.

- Sofort auschalten falls Spannung nicht pulsiert
➠ RPO austauschen

Commissioning and Installation Guide

- The distance between the wall of the flue gas duct and the flue gas outlet (B) of the AGO20... must be a minimum of 10 mm

- The insulation of the chimney must not project beyond the connecting flange, thus insulating the head of the sensor (thermal overload).
  The head of the sensor must remain uncovered!
  Avoid heat due to radiation, e.g. through thermal conductive plates

- When starting up the plant for the first time, the measuring system should be switched on approx. 2 hours prior to usage.
  If the plant is switched off for short periods of the time (1 to 2 weeks), it is recommended to leave the measuring system (QGO... and RPO) switched on.

- During the heating up phase, the detector could deliver an incorrect signal.

- Never use a cold QGO20... in the flueway while burner is operating.

- After changing the sensor, check the proper functioning of the sensor´s heating element

- Voltage at Q4 - Q5 must pulsate at 2-s intervals

- If voltage does not pulsate, switch equipment off immediately
➠ replace RPO

Instructions de mise en service et installation

- La distance entre la paroi de la conduite de gaz et la sortie des gaz de fumée (B) du AGO20... doit être d´au moins 10 mm.

- L´isolation de la cheminée ne doit pas dépasser la bride de raccordement, c´est-à-dire couvrir la tête de la sonde (surcharge thermique). La tête de la sonde ne doit pas être couverte! Eviter la chaleur de rayonnement, p.ex. par tôles thermo-conductrices

- Lors de la première mise en service, le dispositif de mesure doit être raccordé environ 2 heures avant l´utilisation. En case de courtes interruptions de l´installation (1-2 semaines), il est recommandé de ne pas déclencher le dispositif de mesure (QGO... et RPO).

- Pendant l´operation d´échauffement, il est possible que la sonde ne mesure pas correctement.

- Ne jamais introduire le QGO20... à l´état froid ou le laisser introduit dans la cheminée quand le brûleur est en marche.

- Lors d´un changement de sonde, verifier le signal de chauffage de celle-ci.

- Les tensions aux bornes Q4 - Q5 doivent commuter toutes les 2 s.

- Déconnecter immédiatement en cas de non-commutation des tensions
➠ Echanger le RPO

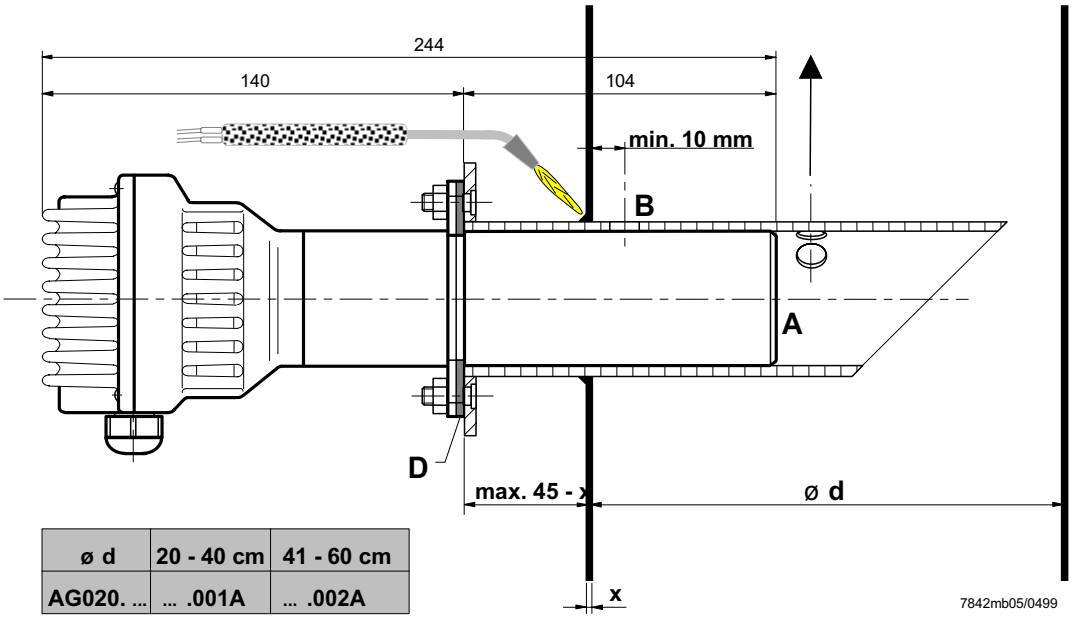

ø d	20 - 40 cm	41 - 60 cm
AG020. ...	... .001A	... .002A

Kerben beachten!
Observe notches!
Attention aux entailles!

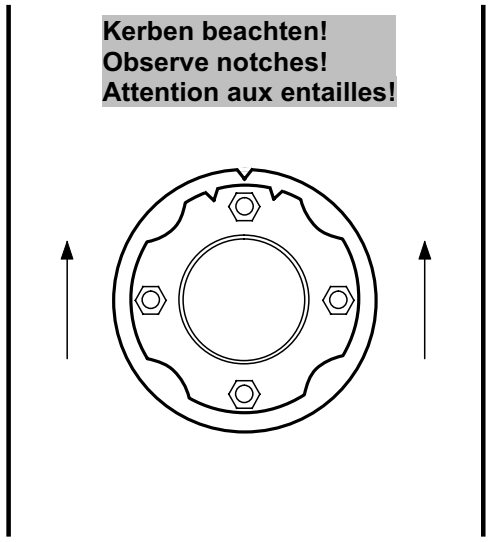

Legende:

Strömungsrichtung

Direction of flow of flue gases

Direction du courant des gaz de fumée

Maßbilder / Dimensions / Encombrements

QGO20...

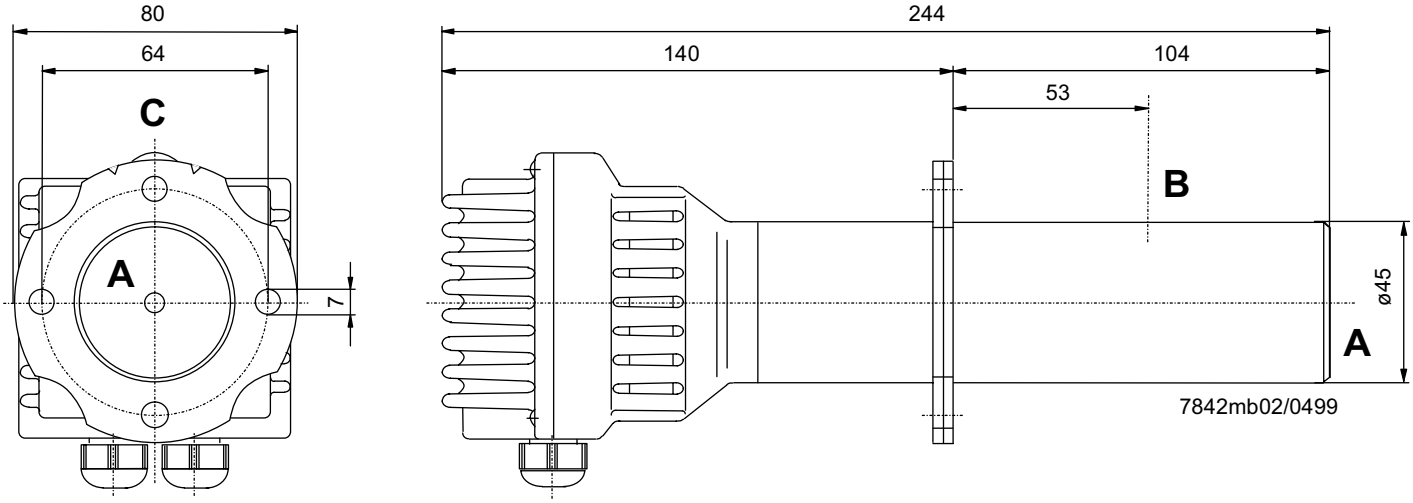

AGO20...

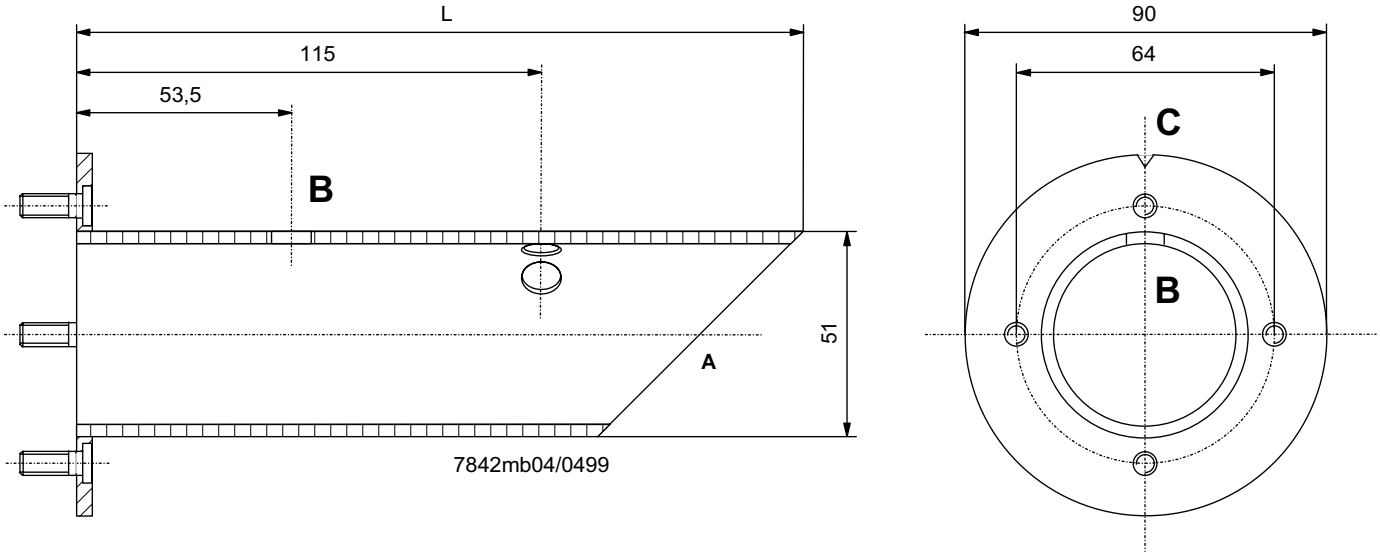

L = 180 mm für AGO20.001A
L = 260 mm für AGO20.002A

A = Rauchgaseintritt
B = Rauchgasaustritt
C = Kerbe
D = Flachdichtung (beiliegend)

L = 180 mm for AGO20.001A
L = 260 mm for AGO20.002A

A = Flue gas inlet
B = Flue gas outlet
C = Notch
D = Flat seal (enclosed)

L = 180 mm pour AGO20.001A
L = 260 mm pour AGO20.002A

A = Entrée du gaz de fumée
B = Sortie de gaz de fumée
C = Entaille
D = Joint d´étanchéité plat (inclus)

© Landis & Staefa Produktion GmbH

Technical Data PLL52...

LMV52... basic unit *Refer to chapter Technical Data!*

PLL52...

Mains voltage «X89-01»	AC 120 V –15 % / +10 %	AC 230 V -15 % / +10 %
Safety class	I with parts according to II as per DIN EN 60730-1	
Mains frequency	50 / 60 Hz ±6 %	
Power consumption	Ca. 4 VA	Ca. 4 VA
Degree of protection	IP54, housing closed	
Transformer AGG5.210		
- Primary side	AC 120 V	
- Secondary side	AC 12 V (3x)	
Transformer AGG5.220		
- Primary side	AC 230 V	
- Secondary side	AC 12 V (3x)	

Environmental conditions

Storage	DIN EN 60 721-3-1
Climatic conditions	class 1K3
Mechanical conditions	class 1M2
Temperature range	-20...+60 °C
Humidity	< 95 % r.h.
Transport	DIN EN 60 721-3-2
Climatic conditions	class 2K2
Mechanical conditions	class 2M2
Temperature range	-30...+70 °C
Humidity	< 95 % r.h.
Operation	DIN EN 60 721-3-3
Climatic conditions	class 3K5
Mechanical conditions	class 3M2
Temperature range	-20...+60 °C
Humidity	< 95 % r.h.

Condensation, formation of ice or ingress of water are not permitted!

Terminal ratings, cable lengths and cross-sectional areas

LMV52... basic unit Refer to chapter «Technical Data / LMV5... and AZL5...!»

PLL52...

Cable lengths / cross-sectional areas	
Electrical connection «X89»	Screw terminals up to max. 2.5 mm²
Cable lengths	≤10 m to QGO20...
Cross-sectional areas	Refer to description of QGO20... Twisted pairs

Analog inputs:	
Fresh air temperature detector	Pt1000 / LG-Ni1000
Flue gas temperature detector	Pt1000 / LG-Ni1000
QGO20...	Refer to Data Sheet N7842
Interface	Communication bus for LMV52...

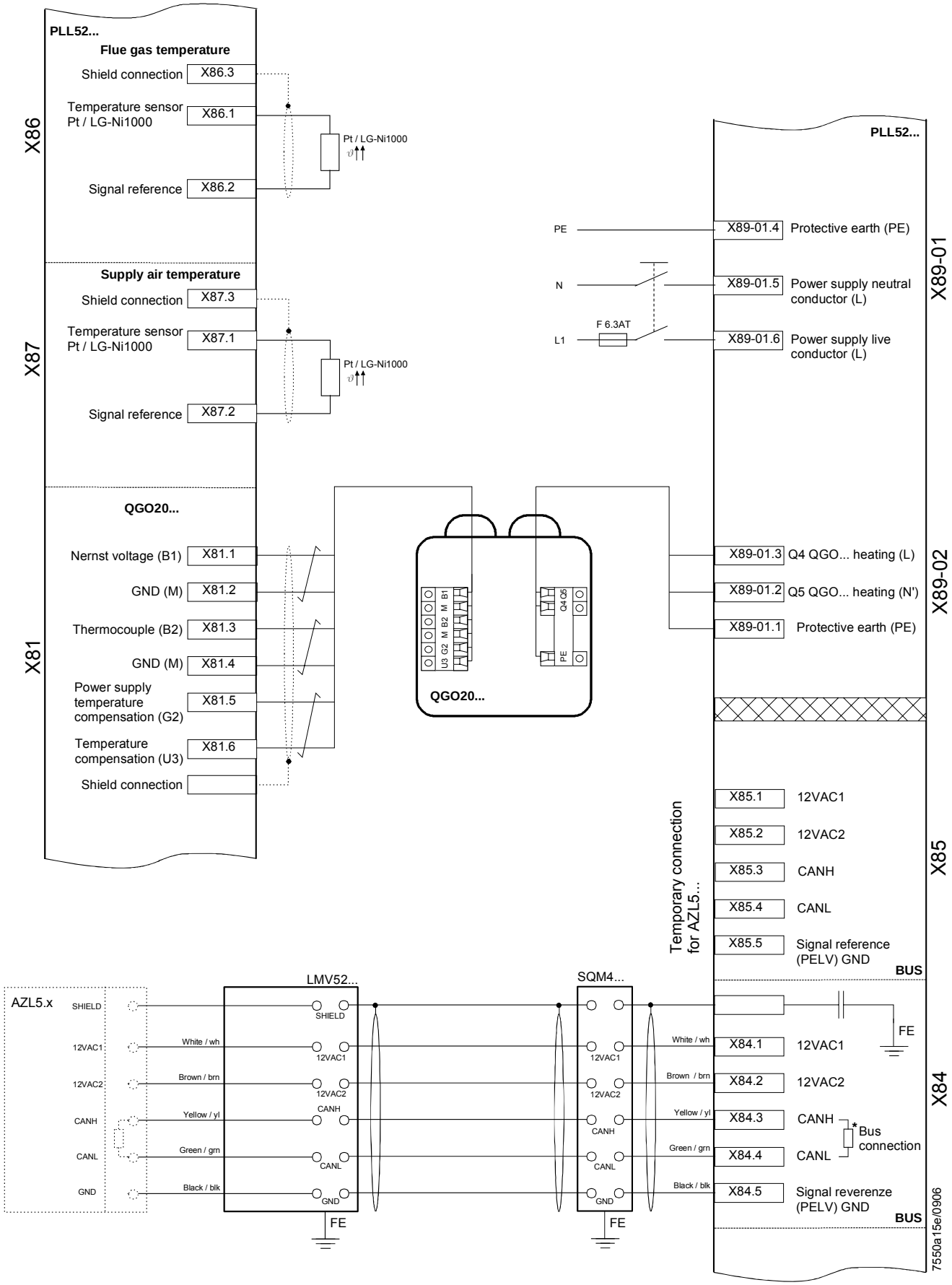
PLL52...
Flue gas temperature
Shield connection
X86.3
Temperature sensor Pt / LG-Ni1000
X86.1
Signal reference
X86.2
X86
Pt / LG-Ni1000
Supply air temperature
Shield connection
X87.3
Temperature sensor Pt / LG-Ni1000
X87.1
Signal reference
X87.2
X87
QGO20...
Nernst voltage (B1)
X81.1
GND (M)
X81.2
Thermocouple (B2)
X81.3
GND (M)
X81.4
Power supply temperature compensation (G2)
X81.5
Temperature compensation (U3)
X81.6
Shield connection
X81
B1
M
B2
M
G2
U3
Q4
Q5
PE
QGO20...
PLL52...
PE
X89-01.4
Protective earth (PE)
N
X89-01.5
Power supply neutral conductor (L)
L1
F 6.3AT
X89-01.6
Power supply live conductor (L)
X89-01
X89-01.3
Q4 QGO... heating (L)
X89-01.2
Q5 QGO... heating (N')
X89-01.1
Protective earth (PE)
X89-02
X85.1
12VAC1
X85.2
12VAC2
X85.3
CANH
X85.4
CANL
X85.5
Signal reference (PELV) GND
BUS
X85
Temporary connection for AZL5...
AZL5.x
SHIELD
12VAC1
12VAC2
CANH
CANL
GND
LMV52...
White / wh
Brown / brn
Yellow / yl
Green / grn
Black / blk
FE
SQM4...
X84.1
12VAC1
X84.2
12VAC2
X84.3
CANH
X84.4
CANL
Bus connection
X84.5
Signal reverenze (PELV) GND
BUS
X84
7550a15e/0906

KOSTAL INVERTER

Connection and programming
for electronically controlled burners with

LMV2x/3x, LMV5x, ETAMATIC
and INVERTER regulation

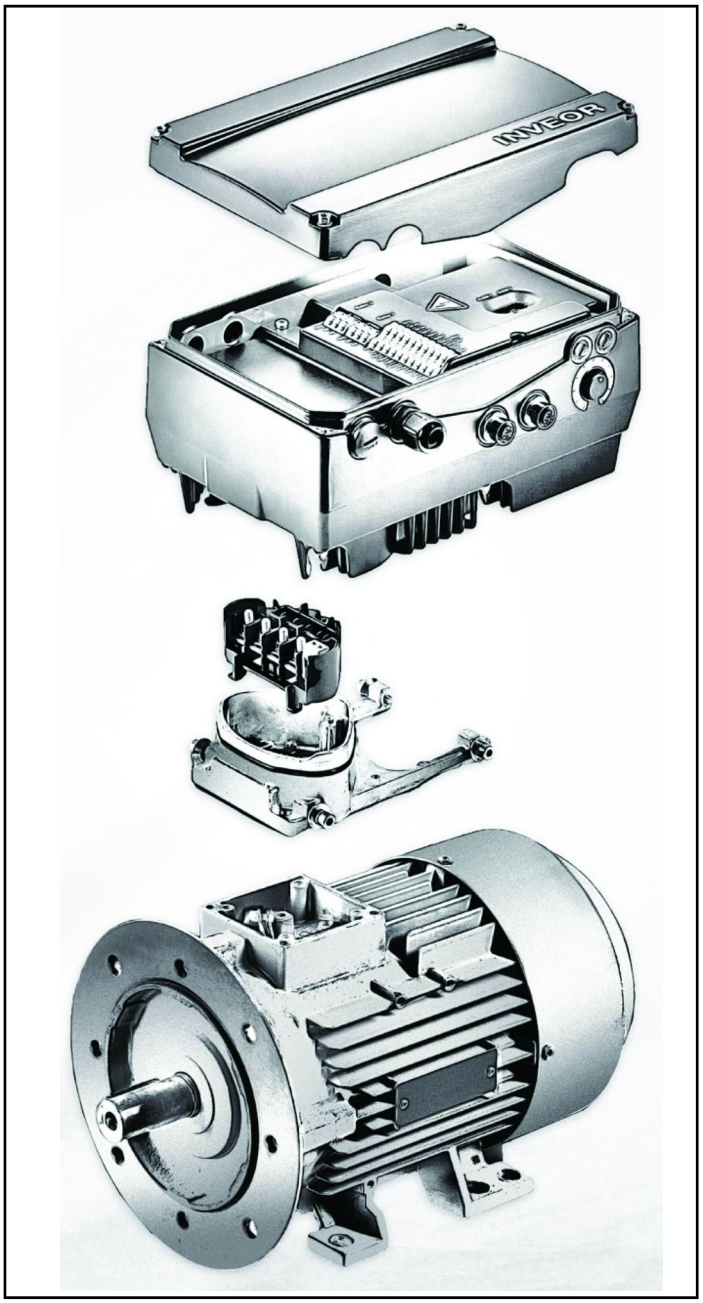

Service Manual
TECHNICAL
INSTRUCTIONS

M12938CA - Rel. 0 - 10/2021

Table of contents:

INVERTER identification, 3

User interface communication (on request), 4

Electrical connections, 5

Motor connection variants for INVERTERS sizes A, B and C, 5

Motor connection variants for INVERTER size D, 6

Connection of INVERTER signals and commands, 7

Electrical connections and parameter configuration, 7

0-10V / 4-20mA analogue input configuration, 8

Configuration of control contact / INVERTER starting and stopping, 9

Configuration of INVERTER start / stop parameters and operating mode, 10

Motor data, 11

Output signal variant for reading motor rpm (optional), 12

Brake chopper connections, 14

Burner terminal with INVERTER interface, 16

IDENTIFICAZIONE INVERTER

INVEOR Mx IVxx PWxx LPxx APxx GHxx DKxx COxx 1

1 2 3 4 5 6 7 8 9 10

	Key		Key
1	Drive controller series: INVEOR	**6**	Application circuit board: AP12 - Standard AP13 - CANopen
2	Installation location/size: motor-integrated - M,size: α, A, B, C, D	**7**	Control: DK01 - Standard (without membrane keypad) DK04 – With membrane keypad
3	Input voltage : IV02 - 230 V	**8**	Housing : GH10 – standard heat sink (black painted)
4	Recommended motor rating : kW: 0.55; 0.75; 1.1; 1.5; 2.2; 3.0; 4.0; 5.5; 7.5; 11.0; 15.0; 18.5; 22.0	**9**	Firmware version : CO00 - Standard CO01 - Specific
5	Printed circuit boards : LP01 / LP03 – Standard (without brake chopper); LP02 / LP04 – Standard (with brake chopper);	**10**	Equipment generation: 1 – current version

The **LMV5x** device controls fan motor rpm via a sensor and commands it via the inverter with a **4÷20mA** signal.
The **LMV3x/LMV2x** device controls fan motor rpm via a sensor and commands it via the inverter with a **0÷10V** signal.
Generally, the inverter curve goes from 50% to 100% of motor rpm. As well as improving burner regulation, this allows for a saving in terms of fan motor consumption.

INVEOR M INVERTER SIZES

TAGLIE
INVERTER INVEOR M...

α ***A*** ***B*** ***C*** ***D***

User interface
COMMUNICATION (on request)

The drive controller can be put in operation in the following ways:

Attention: Contact the manufacturer to order the most suitable device.

USB adaptor for PC	
Via the INVERTER PC software	
INVEOR MMI remote display:	
INVEOR MMI is a portable display on which all inverter parameters can be viewed and changed. Manual available on the KOSTAL website.	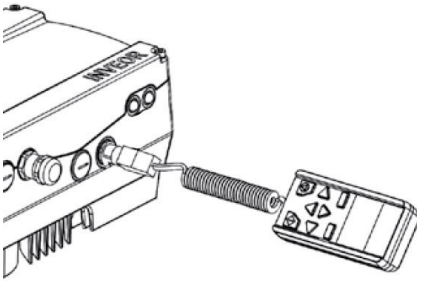
Bluetooth connection:	
Using the Bluetooth adaptor you can connect via app from any device. Download the app for Android / iOS from the Google Play Store / App Store.	
The Bluetooth adaptor is required to create a Bluetooth connection with the inverter. To view and change the inverter parameters, use an external interface device – tablet or mobile phone. Download the app for Android / iOS from the Google Play Store / App Store.	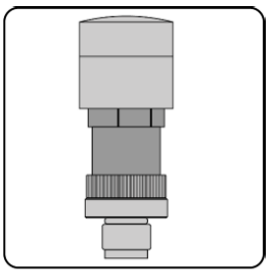

ELECTRICAL CONNECTIONS

Motor connection variants for INVERTERS sizes A, B and C

Star or delta connection for speed controller integrated on the motor

Delta connection variant ***Star connection variant***

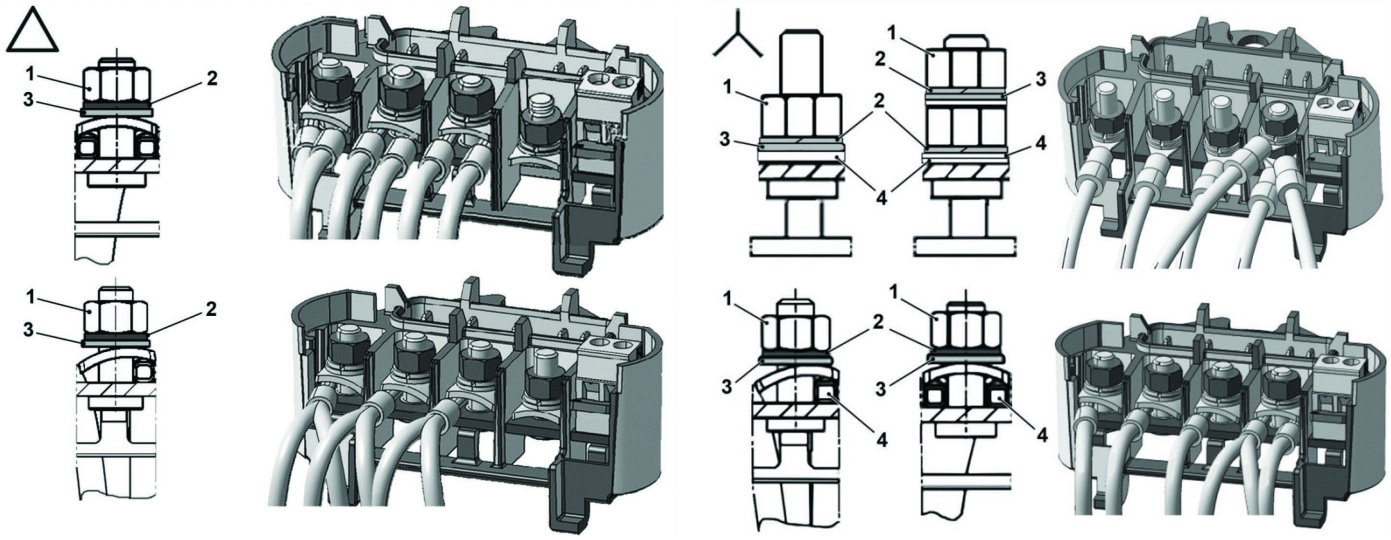

1 Nut MA = 5 Nm
2 Circlip
3 Plain washer
4 Cable shoe

Fig. 1

Motor connection variants for INVERTER size D

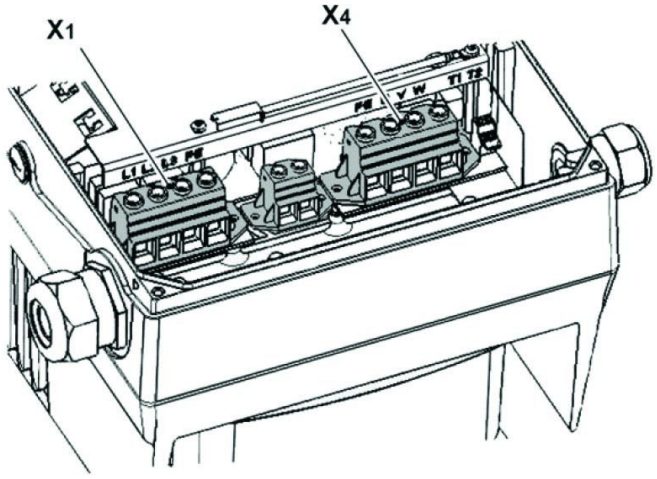

X1 terminal no.	Designation	Assignment
1	L1	Mains phase 1
2	L2	Mains phase 2
3	L3	Mains phase 3
4	PE	Protective conductor

Tab. 1 - X1 terminal assignment - 3 x 400 VAC

X4 terminal no.	Designation	Assignment
1	PE	Protective conductor
2	U	Mains phase 1
3	V	Mains phase 2
4	W	Mains phase 3

Tab. 2 - X1 terminal assignment - 3 x 400 VAC

Fig. 2 – Assembly sequence: Connection box – adapter plate size D

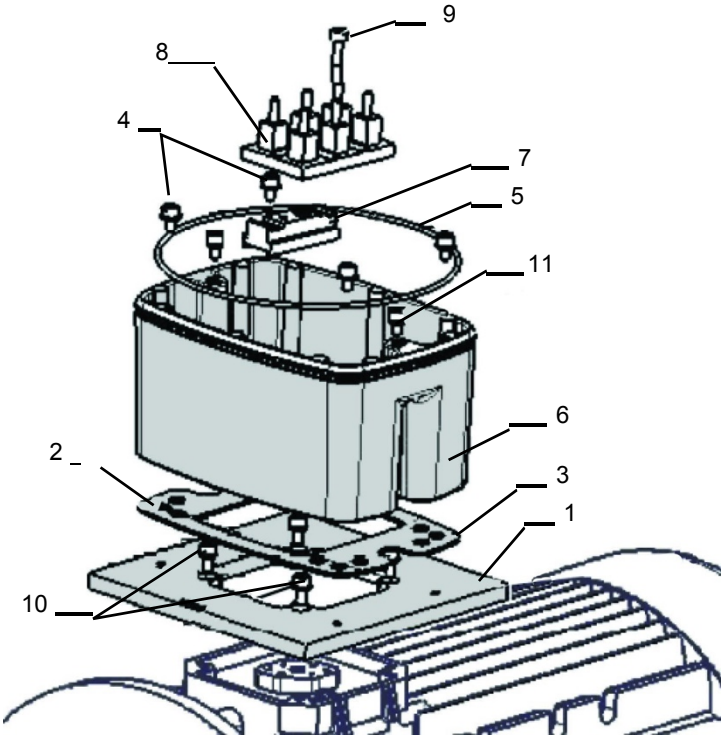

Key:

1 Adapter plate option (variant)
2 Holes depending on motor
3 Seal
4 Retaining bolts with spring elements
5 O-ring seal
6 INVEOR / adapter plate support
7 Terminal heightening option
8 Original terminal (not included)
9 Extended screw option (for pos.7)
10 Retaining bolts with spring elements option
11 INVEOR/support retaining bolts

Connection of INVERTER signals and commands

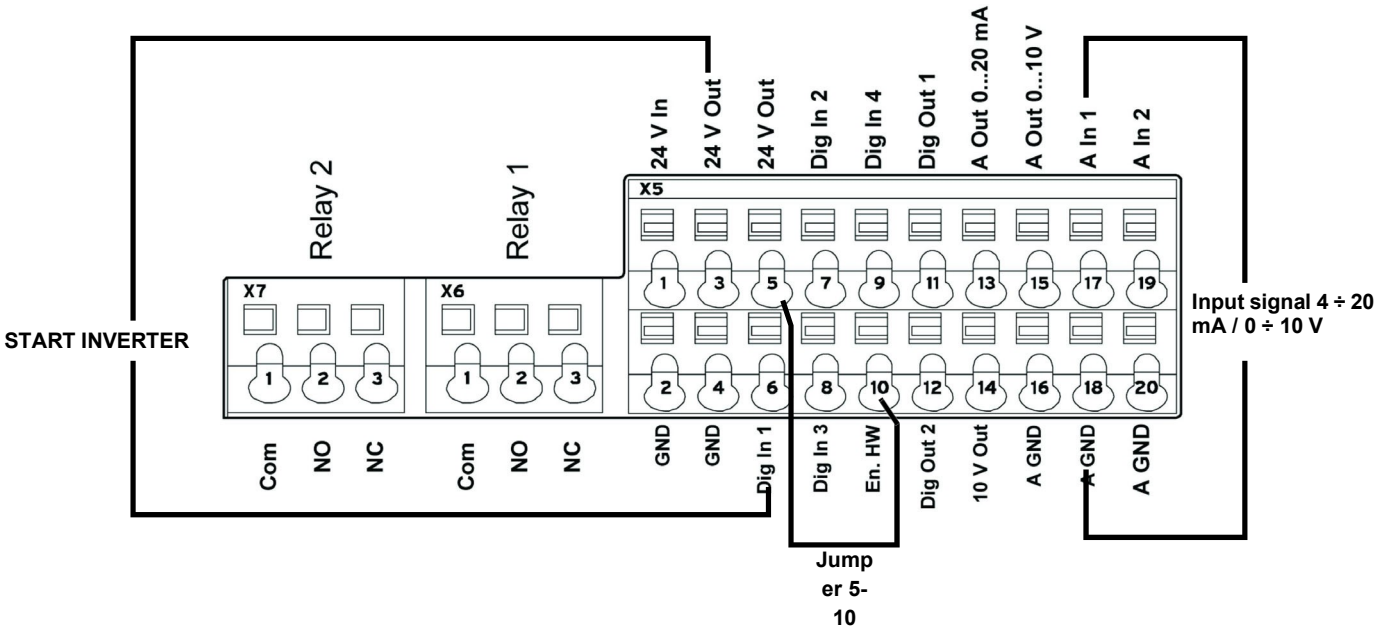

Electrical connections and parameter configuration

There are 2 relays on the INVERTER. Connecting terminals X7-1-2-3 and X6-1-2-3 are used for:

LMV2/3x: Relay 1 is used as a safety contact on the safety loop series of the equipment. Relay 2 is used as a fault indicator on the burner panel front.

LMV5x / ETAMATIC: Relay 1 is used as a contact for control of fan motor start. Relay 2 is used as a fault indicator of the INVERTER to the LMV5x / ETAMATIC equipment.

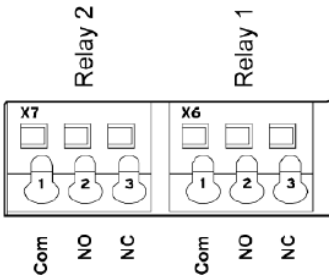

Parameter		
1.181	Automatic reset function	Automatic reset of faults. The INVERTER resets the fault after the set time. **Set value = 30 seconds**
1.182	Automatic reset numbers	With the reset function the maximum number of automatic resets can be limited. **Set value = 0 (maximum number of automatic resets)**
4.190	Relay 1 functions	Select the operating mode of relay 1. **Set value = LMV2x/3x..= 11 (NC inverted error)** **Set value = LMV5x / ETAMATIC = 19 (motor is in NO function)**
4.210	Relay 2 functions	Select the operating mode of relay 2. **Set value = LMV2x/3x..= 11 (NC inverted error)** **Set value = LMV5x / ETAMATIC = 11 (NC inverted error)**
4.210	V O operation	**Set value = 10 (NO error)**

0-10V / 4-20mA analogue input configuration

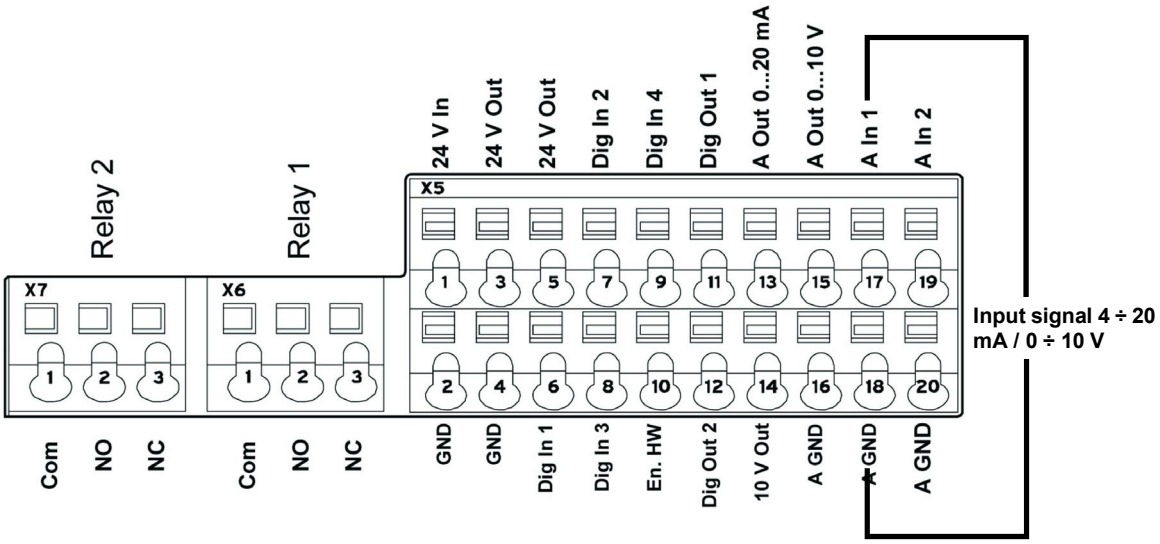

Input AIn1 can be configured as voltage or current input. It is configured as 4-20mA input current for LMV5-Etamatic, and 0-10V input voltage for LMV2x/3x.

4.020	Input type AI1	Specifies the input type, whether voltage or current. **1**= Voltage input 0-10V (LMV2x/3x) **2**= Current input 0/4-20mA (LMV5 ETAMATIC)
4.021	AI1 Standard low	Specifies the minimum value of the analogue input as a percentage of the range. E.g.: 0…10 V or 0…20 mA = 0 %...100 % 2…10 V or 4…20 mA = 20 %...100 % **Set value = 20% for LMV2x/3x, LMV5x, ETAMATIC**
4.022	AI1 Standard high	Specifies the maximum value of the analogue input as a percentage of the range at 10V or 20mA. **Set value = 100%**
4.023	AI1 Response time	Specifies the deadband on the input signal. **Set value = 1%**
4.024	AI1 Filter time	An input change is taken into consideration after this time. If it is too short, a wire break error may appear if the 4-20 mA signal goes to 0 for a short time. **Set value = 4 seconds**
4.030	AI1 Input function	Specifies whether the input is 0 = analogue / 1 = digital input. **Set value = 0 analogue**
4.033	AI1 Measure unit, input 1	Specifies the unit of measurement of input 1. **Set value = 0 (%)**
4.034	AI1 Lower limit	Specifies the lower limit of input 1. **Set value = 0 (%)**
4.035	AI1 Upper limit	Specifies the upper limit of input 1. **Set value = 100 (%)**
4.036	AI1 Wire break time, 5s	Specifies the time after which the fault appears if input AI1 is interrupted (wire break). **Set value = 5 seconds**
4.037	AI1 Inversion	Inverts the signal of input 1. **Set value = 0 (disabled)**

Configuration of control contact / INVERTER starting and stopping

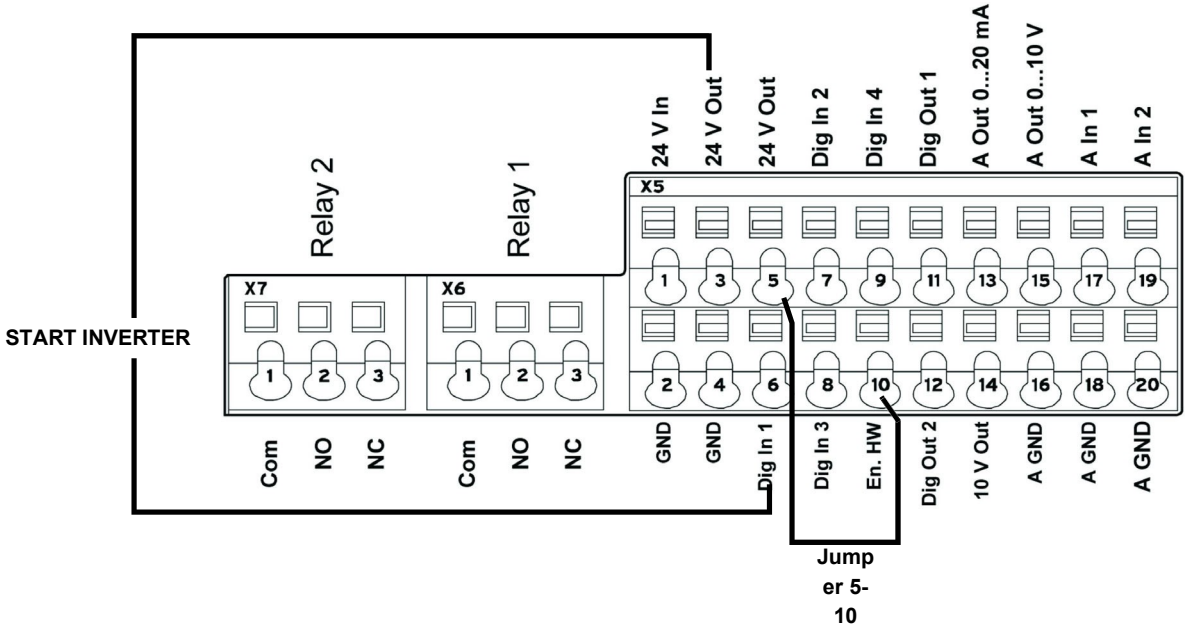

Terminal	
X5-3 (24V Out)… X5-6 (Digit In1)..	Bringing 24V to terminal **X5-6** enables INVERTER operation and the contact that switches it on/off. On LMV2/3x **X5-3** (24V Out) also powers the motor speed encoder.
X5-5 (24V Out) connected with X5-10 (En.HW)…	Required to enable braking ramp xxxx

Configuration of INVERTER start / stop parameters and operating mode

Parameter		
1.020	Min. frequency (Hz)	Minimum input frequency in Hz. **Set value = 0 Hz (LMV2x-3x / LMV5x)** **Set value = > 35 Hz (ETAMATIC)**
1.021	Max. frequency (Hz)	Maximum input frequency in Hz. **Set value = 51,5 Hz (LMV2x-3x / LMV5x)** **Set value = 50 Hz (ETAMATIC)**
1.050	Ramp 1 Braking time 1	Braking time at switch-off to reach the speed of 0 Hz after the start/stop contact has opened (not used). **Set value = 10 seconds**
1.051	Ramp 1 Acceleration time 1	Acceleration time 1 is the time necessary for the drive controller to accelerate from 0 Hz to maximum frequency (not used). **Set value = 10 seconds**
1.052	Ramp 2 Braking time 2	Braking time at switch-off to reach the speed of 0 Hz after the start/stop contact has opened. **Set value = 10 seconds**
1.053	Ramp 2 Acceleration time 2	Acceleration time 2 is the time necessary for the drive controller to accelerate from 0 Hz to maximum frequency. **Set value = 10 seconds**
1.054	Selects ramp used	Digital input 1 (**dig In1 / X5-6**) selects the ramp used. **Set value = 1 (parameters 1.052 and 1.053)**
1.088	Quick stop	Not used but set. **Set value = 10 seconds**
1.100	Operating mode	Frequency control mode: specifies the operating mode of the INVERTER. In our case it is always frequency control (0). **Set value = 0**
1.130	Reference set point	Determines the source from which the reference value is read. In our case it is always analogue input AI1. **Set value = 1 (analogue input 1)**
1.131	Enabling software	Depending on the change made, the motor may start immediately. Selection of the source for enabling control. **Set value = 0**
1.132	Start-up protection	Selection of behaviour in response to enabling software. **Set value = 1** **(Start only with rising edge at input of control enable)**
1.150	Motor rotation direction	Do not change this parameter. To invert the direction of rotation, invert 2 of the 3 INVERTER / MOTOR cabling wires, so that the INVERTERS always have the same setting. **Set value = 1 forwards only / clockwise rotation** **(no changes to direction of rotation are possible)**

Motor data

The motor data depend on the type of motor used. Refer to the data shown on the motor nameplate. Follow the steps below:
- Enter the motor data;
- Activate the motor recognition function;
- If the operation ends successfully, enter the remaining parameters.

During the recognition phase, the INVERTER measures some parameters and changes some settings.
N.B.: At each start-up of the recognition programme, recheck all the parameters in this manual.

Parameter		
33.001	Motor type	Selection of motor type. **Set value = 1 (asynchronous motor)**
33.010	Motor I^2t factor	Not used. Only for encoders. **Set value = 100%**
33.011	I^2t time	Not used. Only for encoders **Set value = 30 seconds**
33.015	R optimisation	If necessary, this parameter can be used to optimise the start-up behaviour. Not used **Set value = 100%**
33.016	Motor phase control	The "Motor connection interrupted" error monitoring (error 45) can be enabled/disabled with this parameter. **Set value = 1 (enabled control)**
33.031	Motor current	Maximum motor current. **Set value = motor nameplate current value in amps**
33.032	Motor rating	Motor shaft rating. **Set value = motor nameplate rating value in watts**
33.034	Motor rpm	Motor rpm. **Set value = motor nameplate speed in rpm**
33.035	Motor frequency	Nominal motor frequency. **Set value = motor nameplate frequency in Hz**
33.050	Stator resistance	Recognised by INVERTER. **Set value = automatically detected, value in Ohm**
33.105	Leakage inductance	Recognised by INVERTER. **Set value = automatically detected, value in henry**
33.110	Motor voltage	Nominal motor voltage. **Set value = 400V**
33.111	Motor cos phi	Data on motor nameplate. **Set value = 0,xx**
33.138	Holding current time	Needed to stop the motor!! After braking it is held at continuous current for a specified time interval. Ensure that there is no overheating in this phase. Recommended time: max 5 s. **Set value = 0 seconds**

Activate the “Motor identification” function and follow the instructions proposed by the INVERTER, then change the parameters described below. The image shows the software screen on the PC.

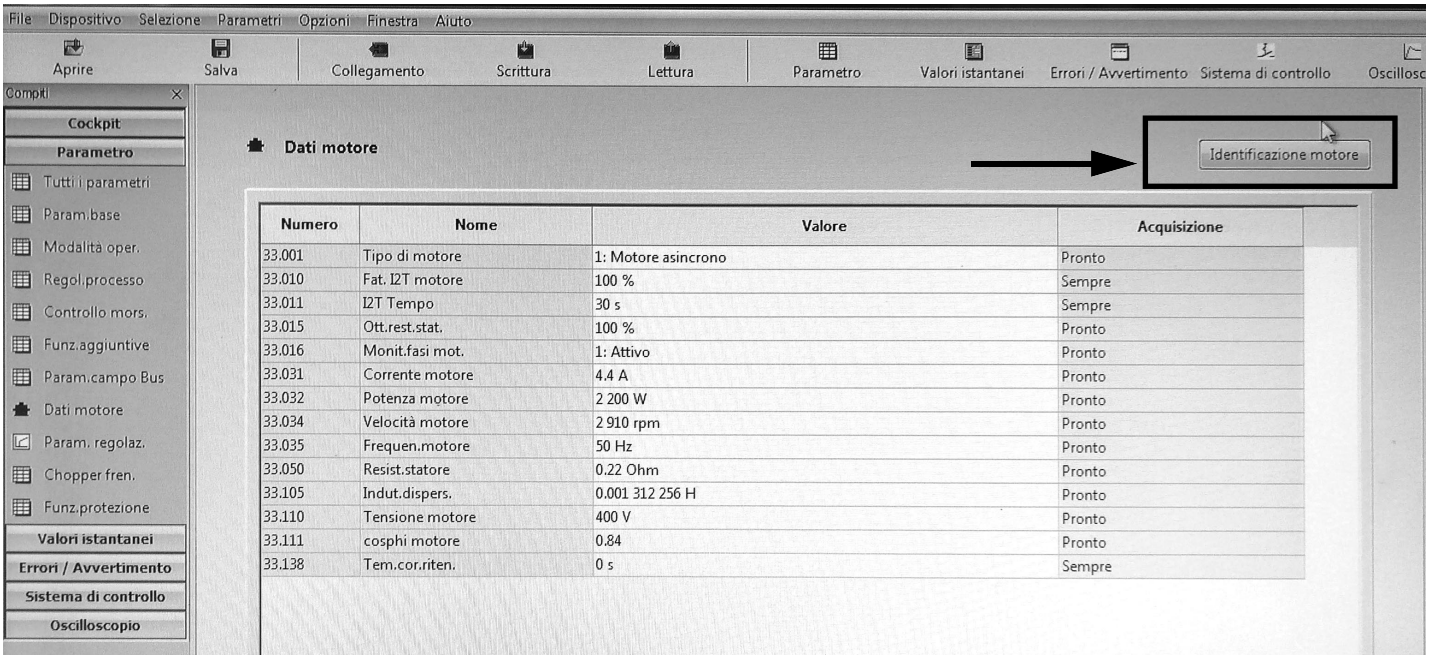

Parameter		
34.010	**Control type**	Open-loop asynchronous motor. **Set value = 100 (open-loop asynchronous motor)**
34.020	**Flying restart**	**Set value = 1 (enabled)**
34.021	**Flying restart time**	Calculated by Inverter. **Set value = value calculated by INVERTER in ms**
34.090	**Speed controller K_P**	Calculated by the inverter during the motor recognition phase. Reset it to 2000 after motor recognition. **Set value = 2000 mA/rad/sec**
34.091	**Speed controller T_N**	Calculated by the inverter during the motor recognition phase. Reset it to 7.5 seconds after motor recognition. **Set value = 7.5 seconds**
34.110	**Slip trimmer**	If set to **1** the function is enabled. If set to **0** the motor performs as if connected to the mains. If compensation is enabled, the system aligns the stator frequency with the rotor. As a result, the actual motor rpm increase and are brought in line with the theoretical motor nameplate rpm. The motor is supplied with the same voltage and frequency, but the current increases and the rpm are brought to the nameplate data. **Set value = 1 (compensation for slippage)**

Output signal variant for reading motor rpm (optional)

To have a 4-20 mA analogue output that indicates the motor rpm to the terminals X5-13 (Aout 0-20 mA) and X5-16 (A GND), set the parameters below:

Parameter		
4.100	Analogue output AO1	Selection of analogue output options. In our case, to have an output proportional to the rpm, set 19. **Set value = 19 (actual rpm)**
4.101	Minimum value of analogue output AO1	Output signal at 0-20 mA. To obtain a 4-20 mA signal with (4 mA = 0 motor rpm), follow the example: if motor rpm are a maximum 2900, calculate: 2900 / 20 x 4 = **580**, which is the negative value corresponding to 0 mA from which to start. Therefore: 0 mA = - 580, 20 mA = 2900 **Set value = - xxx (-580 in the example)**
4.102	Maximum value of analogue output AO1	Maximum rpm value for 20 mA. **Set value = xxxx (2900 in the above example)**

NOTE 1	If the system enters pendulum mode with LMV.. / ETAMATIC, adjust parameters **34.090** and **34.091** by increasing them, in particular parameter **34.090**, in steps of 100mA/rad/sec.
NOTE 2	With LMV 2x/3x with INVERTER control, the device controls the standby rpm with **param. 653**. If, after the fan is switched off, the device LMV 2x/3x sees that the motor continues to run, error **83** diagnostic **32** appears. This occurs if there is significant fan inertia (e.g. on burners with very heavy forward curved blades), then always disable parameter 653, setting it to **0**.
NOTE 3	With LMV 2x/3x the signal 0-10V for motor rpm control during standardisation is brought to approximately 9.7 V and the fan motor rpm is saved. According to the LMV manual, the INVERTER should be set to max 52.5 Hz During standardisation, the INVERTER is driven at approximately 51 ÷ 51.5 Hz and may go out of absorption range with the motor. For this reason, set the INVERTER to max 51.5 Hz. During standardisation, the INVERTER will reach 50Hz and the over-absorption problem will be reduced.
NOTE 4	**If the <u>analogue wire break fault</u> is displayed on the INVERTER and the 4-20 mA inverter signal continues to oscillate between 1 ÷ 6 mA, it does not always mean that the LMV 2x/3x or ETAMATIC equipment is faulty. It could be due to the old firmware of the INVERTER and should therefore be updated. If this is the case, contact the Service Centre.**

FAULTS / PROBLEMS.. SOLUTIONS		
Parameter 36.020	If error 36 appears	Problems detected in the mains supply. By setting this parameter to 0, the INVERTER no longer checks the mains and the error message disappears. It is recommended to leave the parameter set to 1.
Parameter 33.105	If mains voltage drops during operation	When the mains voltage drops, the INVERTER decreases the motor rpm. To reduce this change, set the parameter to 0, which should solve the problem.

Brake chopper connections

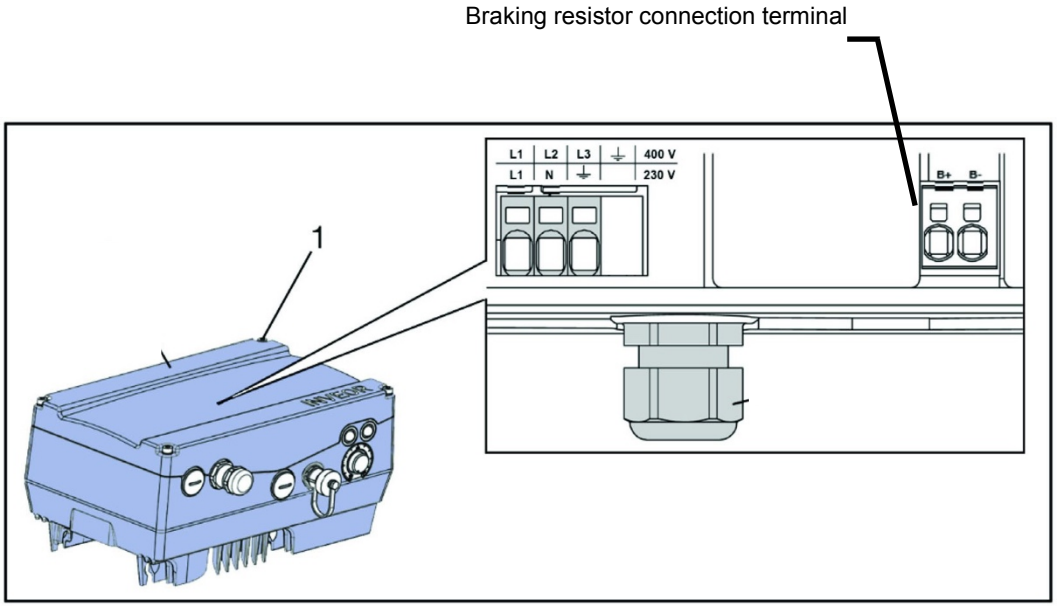

Brake chopper connections

Terminal no.	Designation	Assignment
1	B+	Braking resistor connection (+)
2	B-	Braking resistor connection (-)

Optional assignment of brake chopper

Parameter	
Braking resistor	Enabled or disabled

Braking resistors

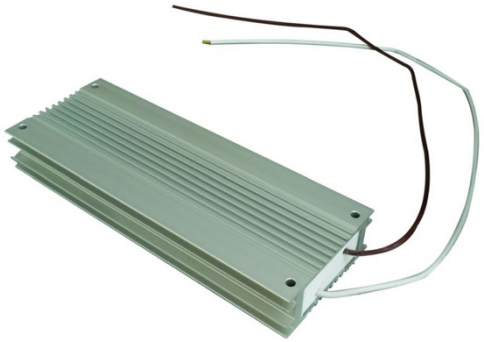

Burner terminal block with interface INVERTER

Versioni bruciatore con LMV2x/3x

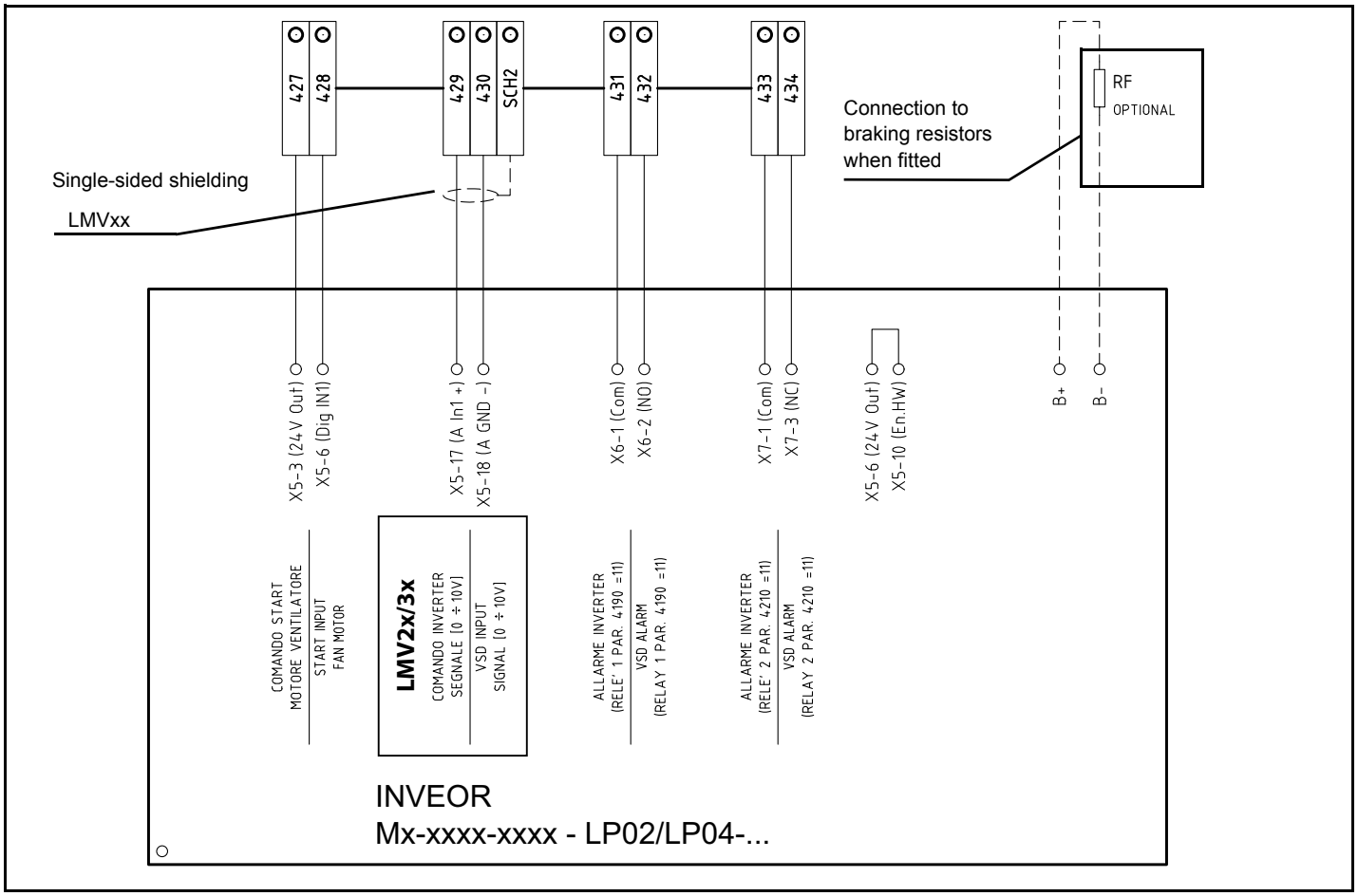

Versioni bruciatore con LMV5x o ETAMATIC

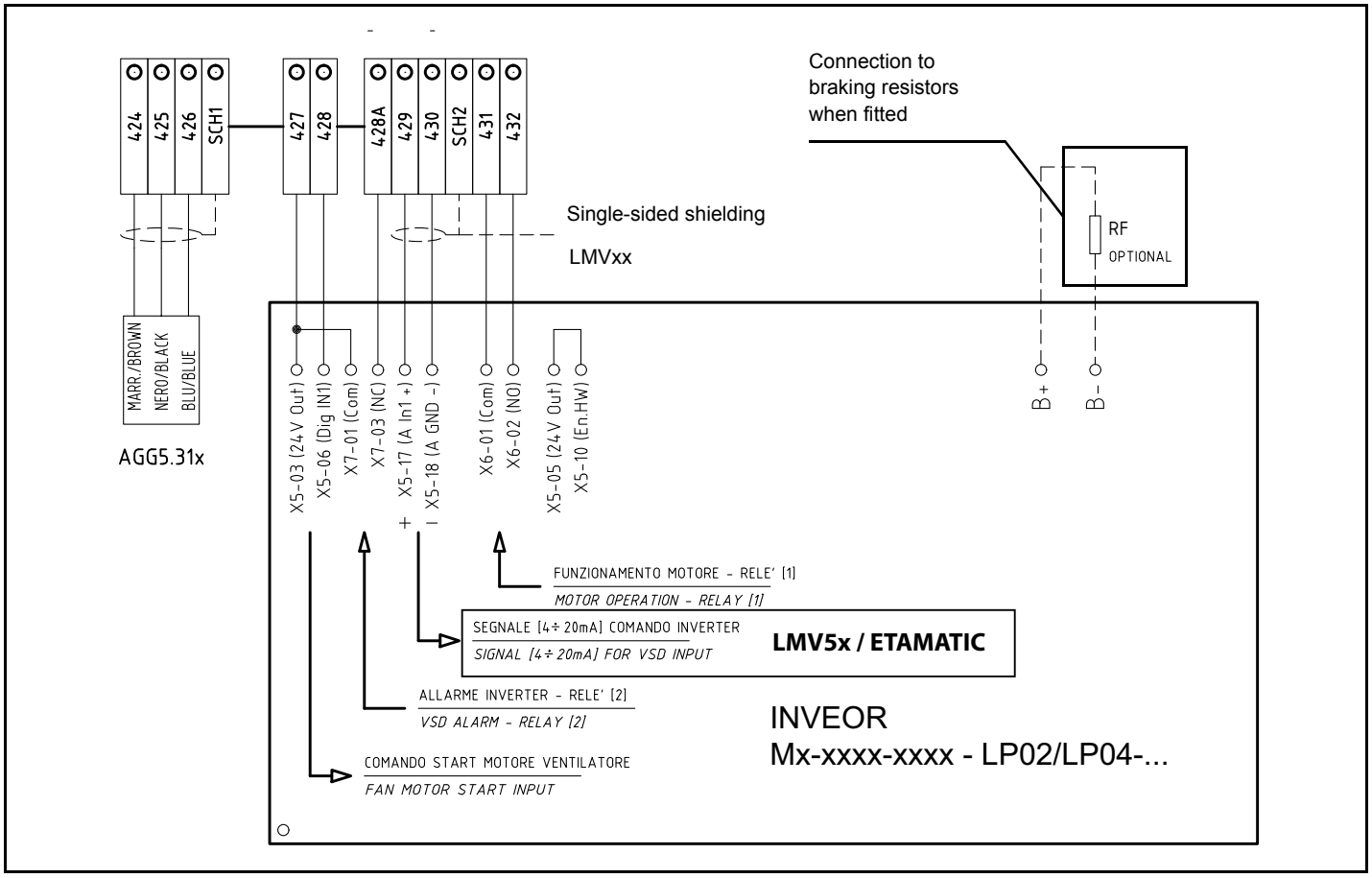

C.I.B. UNIGAS S.p.A.
Via L.Galvani, 9 - 35011 Campodarsego (PD) - ITALY
Tel. +39 049 9200944 - Fax +39 049 9200945/9201269
web site: www.cibunigas.it - e-mail: cibunigas@cibunigas.it

Note: specifications and data subject to change. Errors and omissions excepted.